IBM 3728 Communication Control Matrix Switch

Installation Instructions

SY27-0274-0

Federal Communications Commission (FCC) Statement

Warning: This equipment generates, uses, and can radiate radio frequency energy and if not installed and used in accordance with the instruction manual, may cause interference to radio communications. It has been tested and found to comply with the limits for a Class A computing device pursuant to Subpart J of Part 15 of FCC Rules, which are designed to provide reasonable protection against such interference when operated in a commercial environment. Operation of this equipment in a residential area is likely to cause interference in which case the user at his own expense will be required to take whatever measures may be required to correct the interference.

First Edition (October 1985)

IBM has prepared this maintenance manual for use of IBM customer engineers in the installation, maintenance, and repair of the specific machine indicated. IBM makes no representations that it is suitable for any other purpose.

The information in this manual is sometimes changed. Any changes will be given in later editions or in Technical Newsletters. Ensure that you have the latest edition and all Technical Newsletters before you use the manual.

Any reference to an IBM program product in this document is not intended to state or imply that only IBM's program product may be used. Any functionally equivalent program may be used instead. It is possible that this material may contain reference to, or information about, IBM products (machines and programs), programming, or services that are not announced in your country. Such references or information must not be construed to mean that IBM intends to announce such IBM products, programming, or services in your country.

Manuals are not kept at the address that follows: make your requests for IBM manuals to your IBM representative or to the IBM branch office for your area.

If you have comments, write them on the form at the back of this manual. If the form has been removed, send your comments to IBM Corporation, Information and Interface Development Support, Department E01, PO Box 12195, Research Triangle Park, North Carolina, U.S.A. 27709. IBM may use or distribute any of the information you supply in any way it believes appropriate without incurring any obligation whatever. You may, of course, continue to use the information you supply.

Contents

Figures

List of Related Publications

The following list of publications assists you in the assemblage, use, and maintenance of the IBM 3728 Matrix Switch:

IBM 3728 Communication Control Matrix Switch Installation Planning and Configuration Guide, GA27-3641

IBM 3728 Communication Control Matrix Switch Introduction, GA27-3640

IBM 3728 Communication Control Matrix Switch Support Processor Operations Guide, GA27-3644

IBM 3728 Communication Control Matrix Switch Switch Control Console Operations Guide, GA27-3640

IBM 3728 Communication Control Matrix Switch Maintenance Information Manual-1, SY27-0273

IBM 3728 Communication Control Matrix Switch Maintenance Information Manual-2, SY27-0282

IBM Personal Computer XT Guide to Operations

Rules for Safety

If (1) you know the safety rules for working with electrical and mechanical equipment and (2) you observe the rules, you can work safely with IBM equipment.

Do not fear electricity, but respect it.

While you are maintaining IBM equipment, (1) observe every safety precaution possible and (2) observe the following safety rules.

Work Environment

- Do not work alone in hazardous conditions or near equipment that has dangerous voltages. Always inform your manager if the conditions or voltages are a possible problem.
- Always look for possible hazards in your work environment. Examples of hazards are: moist floors, nongrounded extension cables, power surges, and missing safety grounds.
- Do not perform any action that makes the product unsafe or that causes hazards for the customer personnel.
- Before you start the equipment, ensure that other CEs, and customer personnel, are not in a hazardous position.
- Do not wear loose clothing that can be trapped in the moving parts of a machine. Ensure that the sleeves of your clothing are fastened or are rolled above the elbow. If your hair is long, or if you wear a neck scarf, fasten it to make it safe.
- Insert your necktie into your clothing or fasten it with a clip (preferably nonconductive) at approximately 8 centimeters (3 inches) from its end.
- Lift the equipment or parts by standing or pushing up with your stronger leg muscles; this action removes the strain from the muscles in your back. Do not lift any equipment or parts that are too heavy for you.
- Put removed machine covers in a safe place while you are servicing the machine. Reinstall the covers before returning the machine to the customer.
- Always keep your CE tool kit away from walk areas so that other persons cannot trip over it. For example, keep the kit under a desk or table.
- Observe good housekeeping practices in the area of the machines while you are performing maintenance and after completing it.

- After maintenance, reinstall all safety devices, such as guards, shields, labels, and ground wires. Exchange safety devices that are worn or defective. (Remember: the safety devices protect you from a hazard. You destroy their purpose if you do not reinstall them when you have completed the service call.)

Electrical Safety

- If possible, always unplug the power-supply cable before you work on a machine. When you switch off power at the wall box, lock the switch in the off position or attach a DO NOT OPERATE tag (Z229-0237) to the switch.

  Note: A non-IBM attachment to an IBM machine may be powered from another source and may be controlled by a different switch or circuit breaker.

- Switch off all power before (1) removing or assembling the main units of the equipment, (2) working near to power supplies, (3) inspecting power supplies, or (4) installing changes in machine circuits.

- Unless the maintenance documents specifically instruct you, do not service the following parts with power on *if the part is removed from its installed position in the machine:* power supplies, pumps, blowers, motor generators, and other units with voltages that are more than 30 V AC or 42.4 V DC. (This rule ensures that correct grounding is maintained.)

- If you really need to work on equipment that has exposed live electrical circuits, observe the following precautions:

  Ensure that another person, who is familiar with the power-off controls, is near you. Another person must be there to switch off the power, if necessary.

  Do not wear jewelry, chains, metal-frame eyeglasses, or other personal metal objects. (Remember: if the metal touches the machine, the flow of current increases because the metal is a conductor.)

  Use only insulated probe tips or extenders. (Remember: worn or cracked insulation is unsafe.)

  Use only one hand while you are working on live equipment. Keep the other hand in your pocket or behind your back. (Remember: there must be a complete circuit for an electrical shock to occur. This precaution prevents *your body* from completing the circuit!)

  When you use a tester, set its controls correctly and use insulated probes that have the correct electrical specification.

  Do not touch objects that are grounded, such as metal floor strips, machine frames, or other conductors. Use suitable rubber mats obtained locally, if necessary.

- When you are working with machines having voltages more than 30 V AC or 42.4 V DC, observe the special safety instructions given in customer engineering memorandums (CEMs).

- Never *assume* that power has been removed from a circuit. First, *check* that it has been removed.

- Do not touch live electrical circuits with the surface of a plastic dental mirror. (Remember: the surface of the dental mirror is conductive and can cause damage and personal injury.)

- If an electrical accident occurs:

  1. *Use caution; do not be a victim yourself.*

  2. *Switch off the power.*

  3. *Instruct another person to get medical aid.*

  4. *If the victim is not breathing, perform mouth-to-mouth rescue breathing. See "Electrical Accidents - First Aid" (below).*

Mechanical Safety

Do not touch moving mechanical parts when you are (1) lubricating a part, (2) checking for play, or (3) doing other similar work.

Safety Glasses

Wear safety glasses when:

- Using a hammer to drive pins or similar parts
- Using a power drill
- Using a spring hook to attach or remove a spring
- Soldering parts
- Cutting wire or removing steel bands
- Using solvents, chemicals, or cleaners to clean parts
- Working in any other conditions that could injure your eyes.

Tools, Testers, and Field-Use Materials

Do not use tools and testers that have not been approved by IBM. Ensure that electrical hand tools, such as Wire-Wrap— tools and power drills, are inspected regularly.

- Exchange worn and broken tools and testers.
- Do not use solvents, cleaners, or oils that have not been approved by IBM.

Summary

Prevention is the main aid to electrical safety. Always think about electrical safety and use *good practice,* for example:

- Ensure that the customer's power receptacle matches the IBM equipment specifications.
- Inspect power cables and plugs; check for loose, damaged, or worn parts.
- Review the procedure in the maintenance documents before you remove a part that can hold an electrical charge from the machine. *Carefully* discharge the necessary parts exactly as instructed by the procedure.
- Do not use a normal light (for example, a table lamp) as an extension trouble light at a machine.

Never *assume* that a machine or a circuit is safe. No machine is *always* completely safe. You may not know the exact condition of a machine because, for example:

- The power receptacles could be wrongly wired.
- Safety devices or features could be missing or defective.
- The maintenance and/or changes history could be wrong or not complete.
- The design could have a problem.
- The machine could have damage, caused when it was shipped.
- The machine could have an unsafe change or attachment.
- An engineering change or a sales change could be wrongly installed.

— Trademark of the Gardner-Denver Co.

- The machine could be deteriorated (1) because it is old or (2) because it operates in an extreme environment.
- A part could be defective, therefore causing a hazard.
- A part could be wrongly assembled.

These are some of the ways that the condition of the machine could affect safety. *Before you start a service call or procedure, have good judgment and use caution.*

Electrical Accidents · First Aid

When performing rescue procedures for an electrical accident, do as follows:

- *Use Caution:* If the victim is still in contact with the electrical-current source, remove the power; to do this, you may need to operate the room emergency power-off (EPO) switch or the disconnecting switch. If you cannot find the switch, use a dry wooden rod or other nonconductive object to pull or push the victim away from the contact with the electrical-current source.

- *Work Quickly:* If the victim is unconscious, he/she may need (1) mouth-to-mouth rescue breathing and possibly (2) external cardiac compression if the heart is not beating.

- *Call for the Rescue Service,* such as the ambulance or the hospital. Instruct another person to call for medical aid.

Determine if the victim needs mouth-to-mouth rescue breathing. If he/she does, perform the following steps.

> **CAUTION**
> Use extreme care when you perform rescue breathing for a victim who may have breathed-in toxic fumes. *Do not breathe-in air that the victim has breathed-out.*

1. Prepare for rescue breathing:

   a. Ensure that the victim's airway is open and that it is not obstructed; check the mouth for objects that may be obstructing the airway, such as chewing gum, food, dentures, or the tongue.

   b. Place the victim on his/her back, put one hand behind the victim's neck, and put the other hand on his/her forehead.

   c. Lift the neck with one hand, and tilt the head backward by pressing on the forehead with the other hand. See Figure 1.

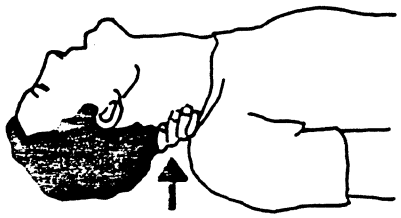

Figure 1.

2. *Look, listen, and feel* to determine if the victim is breathing freely:

   a. Put your cheek near to the victim's mouth and nose.

b. Listen and feel for the breathing-out of air. At the same time, look at the victim's chest and upper abdomen to see if they move up and down.

3. **If the victim is not breathing correctly:**

a. Keep the victim's head tilted backward; (see Figure 1). Continue to press on the forehead with your hand; at the same time, rotate this same hand so that you can pinch together the victim's nostrils with your thumb and finger. See Figure 2.

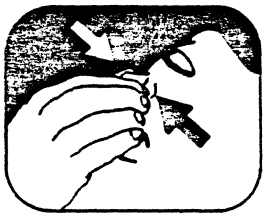

Figure 2.

b. Open your mouth wide and take a deep breath. Make a tight seal with your mouth around the victim's mouth as shown in Figure 3 and blow into the victim's mouth.

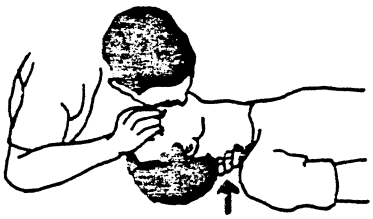

Figure 3.

c. Remove your mouth to let the victim breathe-out, and check that the victim's chest moves down. See Figure 4.

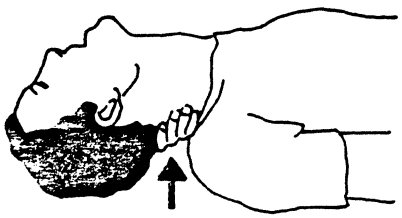

Figure 4.

d. Repeat steps b and c once every 5 seconds either until the victim breathes for himself/herself or until medical aid comes.

Reporting Accidents

Report, to your field manager, all electrical accidents, possible electrical hazards, and accidents that nearly occurred. (Remember: an accident that nearly occurs might be caused by a design problem; your immediate reporting ensures that the problem will be solved quickly.)

Report also all small electrical shocks. (Remember: a condition that causes a small shock need only differ slightly to cause serious injury.)

Section 1.0 - Introduction

The IBM 3728 Communication Control Matrix Switch (hereafter referred to as the Matrix Switch) is a telecommunication switching system that electronically switches interface lines in a telecommunication network.

The advantage of electronically switching interface lines is, that when you are reconfiguring, monitoring, and testing a network, all of these functions are accomplished internally and from a central location. There is no need to physically connect and disconnect interface lines. This enhances the manageability and reliability of your network.

All operations that the Matrix Switch performs, are operator controlled and monitored through the switch control console (an IBM 3161) or an IBM 5182 Personal Computer XT (support processor).

In a telecommunication network, the Matrix Switch is connected between the following terminal devices:

- Between data terminal equipment (DTE) and data circuit-terminating equipment (DCE).
- Between DCEs and telecommunication lines.

The typical DTE is a communication controller or a terminal controller. The typical DCE is a modem.

A typical layout of the Matrix Switch in a telecommunication network is shown in Figure 1-1.

Extension units can be added to the Matrix Switch to meet the requirements of an expanding network. The Matrix Switches can be installed at different locations within the network.

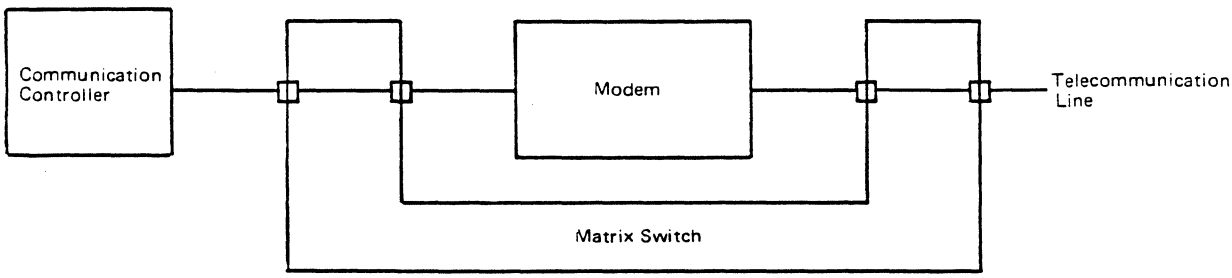

Figure 1-1. Layout of a Matrix Switch in a Telecommunication Network

1.1 Redundant Subsystems

The Matrix Switch is efficient and reliable because each major subsystem contains redundant components. The redundant components are:

- Power supply modules
- Master timing cards
- Microprocessor cards.

A failure in any major subsystem results in an automatic cutover to the redundant component. This ensures continuous operation of the Matrix Switch in the telecommunication network.

Failed subsystems in the Matrix Switch are identified by front panel lights in the card cage and by messages displayed on the cathode ray tube (CRT). While the Matrix Switch remains online and operative, an IBM customer engineer can replace the failed subsystem.

1.2 Matrix Switch Components

1.2.1 Minicassette Drive

The minicassette drive (Figure 1-2) provides the microcode for the following:

- Internal operating system
- Device drivers
- Initial microcode loading (IML) for the Matrix Switch.

1.2.2 System Card Slots

The system card slots (Figure 1-2) contain the master timing and microprocessor cards. These are the system cards that are required for the most fundamental operations of the Matrix Switch.

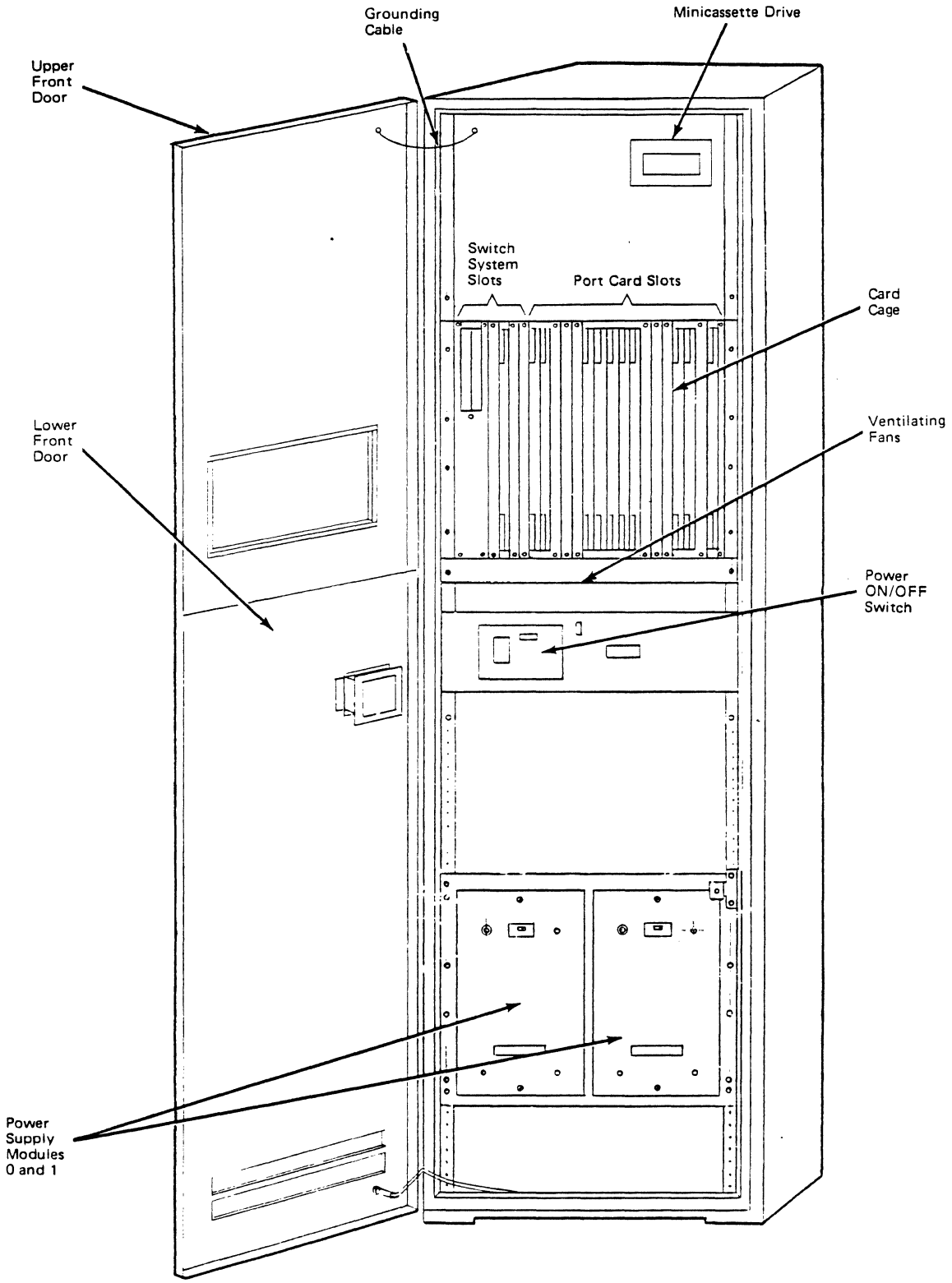

Figure 1-2. Matrix Switch, Front View

1.2.3 Port Card Slots

The port card slots (Figure 1-2) contain the Port cards. The Port cards are:

- EIA/8
- EIA/8D
- VF/16
- V.35/2
- V.35/4
- V.35 Real Time Test
- V.24/RS232C Real Time Monitor
- Multiunit Switch/8 (MS/8).

1.2.4 Option Card Slots

Option cards are:

- Active/Passive Test Switch
- Network Control Interface
- Extension Unit Control

1.2.5 Ventilating Fans

The ventilating fans (Figure 1-2) provide heat dissipation for the unit. This increases the life span of the Matrix Switch.

1.2.6 Power Supply Modules 0 and 1

These are redundant power supplies (Figure 1-2) and each one provides operating voltages of +5, +12, and −12 volts DC. The current demand is shared between them. If one power supply module fails, there is an automatic cutover to the redundant power supply module that now assumes the total load.

1.2.7 Microprocessor Connector Panel

The Microprocessor Connector Panel (Figure 1-3) provides interfaces between the Matrix Switch and the following equipments:

- switch control console (SCC)
- switch logging printer (SLP)
- Optional Remote-Test Modem.

There are two dipswitches on the microprocessor connector panel. Dipswitch S1 provides the baud rate selection for the switch control console (SCC) and the switch logging printer (SLP). Dipswitch S2 is used to select the node number (assigned location number within the network) for the particular Matrix Switch being used.

1.2.8 Network Control Interface Panel

The network control interface panel (Figure 1-3) provides four redundant EIA lines to connect a Matrix Switch at one location to Matrix Switches at other locations. Switching control and reporting information are relayed through these channels.

1.2.9 Port Connector Panels

Port Connector Panels 0 through E (Figure 1-3) provide connections for the V.24/RS232C, V.35, and voice frequency (VF) interfaces.

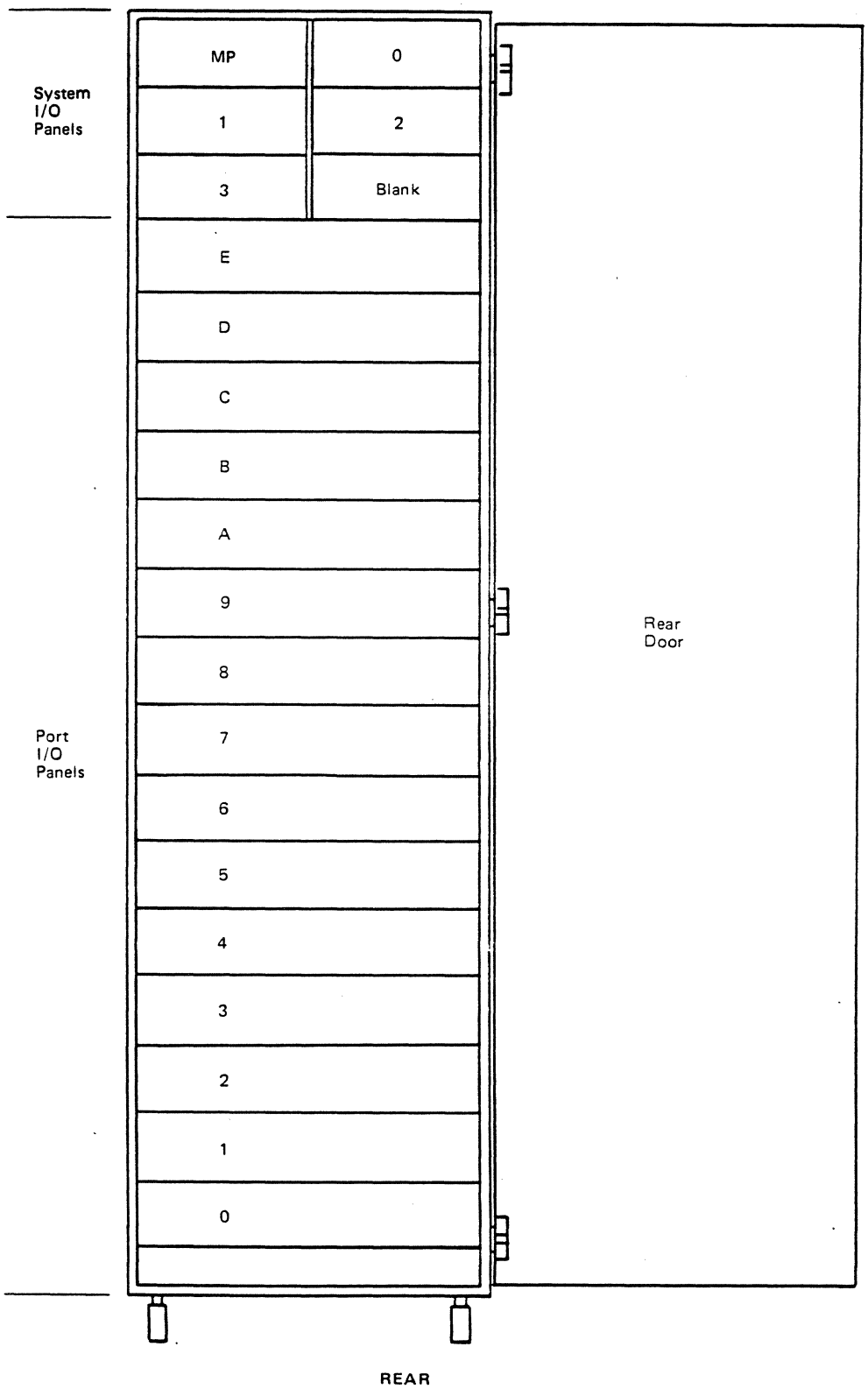

Figure 1-3. Matrix Switch, Rear View

1.2.10 Switch Control Console (SCC)

The SCC (Figure 1-4) is used to perform the basic control functions of monitoring, switching, patching, and alarming at one or all locations.

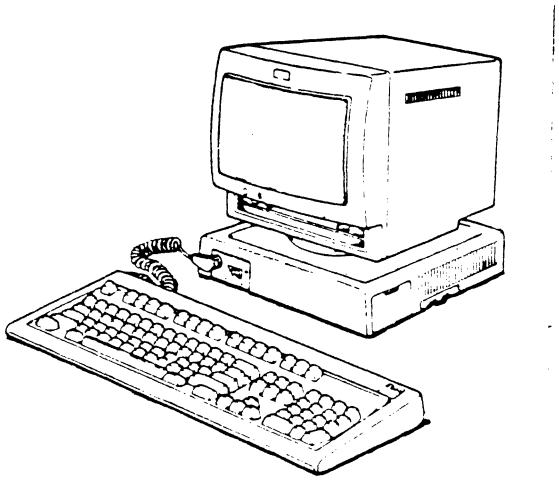

Figure 1-4. Switch Control Console

1.2.11 Support Processor

The support processor (Figure 1-5), an IBM PC/XT, consists of a video display, a system unit/disk drive, and a keyboard.

The support processor performs the same functions as the switch control console. The support processor also allows the customer to perform switch control console functions and operations in a single step or as a group.

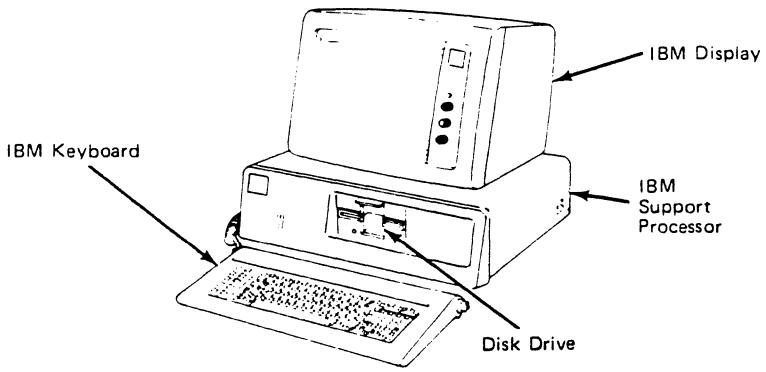

Figure 1-5. Matrix Switch Support Processor

1.2.12 Switch Logging Printer

The switch logging printer (SLP) (Figure 1-6) provides a time and date stamped hard copy of event reports and Matrix Switch activity. It is required if the customer did not order a support processor.

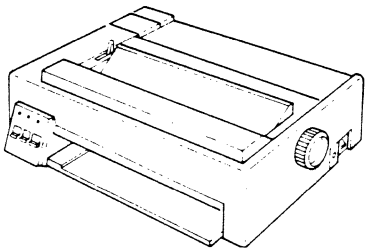

Switch Logging Printer, IBM 4201

Figure 1-6. Matrix Switch Switch Logging Printer

1.2.13 Support Processor Printer

The support processor printer (Figure 1-7) is an IBM 5182 Personal Computer Color Printer. The support processor printer is used only with the support processor. It can replace or be used in addition to the switch logging printer. The support processor printer provides printed copy of support processor operations and event reports.

> **Note:** The support processor printer uses a four color ribbon (PN 1501573). If any other ribbon is used, the printer will not print correct colors.

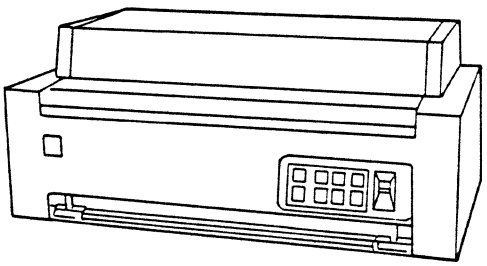

Support Processor Printer, IBM 5182

Figure 1-7. Support Processor Printer

Section 2.0 - Preinstallation Checks

Before installing the Matrix Switch, ensure that the following preinstallation checks have been completed:

- ☐ Confirm that the site preparation has been completed as detailed in the *IBM 3728 Communication Control Matrix Switch Installation Planning and Configuration Guide*, GA27-3641.

The following checks apply to the installation of extension units to an existing Matrix Switch.

- ☐ If the existing installation is a single unit Matrix Switch, ensure that it contains an Extension Unit Control Card and I/O Panel on the rear panel. If not, install the Extension Unit Control Card and I/O panel. This card and I/O panel are included in a miscellaneous equipments specifications (MES) already delivered to the customer. If the Extension Unit Control Card and I/O panel for the base unit are not available, report this to your IBM branch office.

- ☐ Verify that the existing units operate without errors. If the customer does not have a switch logging printer, review the event reports on the support processor log files.

- ☐ Once the existing Matrix Switch is verified as functioning without any error conditions present, proceed to Section 3.0, "Preparation."

START

Section 3.0 - Preparation

1. Check early-warning information for any data relating to the installation.

   EMEA countries only: Check the local IBM office (if available) or the IBM branch office for any information relating to the Matrix Switch. Record any information necessary for this installation. Standard length cables are shipped with the Matrix Switch. If you received other cables ordered by an exception cable order, return the unused cables.

2. Become familiar with all of the installation instructions contained in this manual.

3. Check that all items listed on the Shipping Group Bill of Materials (B/M) have been received.

4. Check that all of the cables specified on the Matrix Switch base unit configuration (either the initial configuration or on the Matrix Switch base unit MES [provided when there is further installation of extension units]) have been received. Report any discrepancies to the IBM branch office.

5. Obtain the hardware configuration confirmation from the customer.

Section 4.0 · Special Tools/Test Equipment

No special tools or test equipment are required.

Section 5.0 - Locating the Matrix Switch

Warning: Ensure that the machine casters do not drop into the floor tile openings.

1. Unpack the Matrix Switch. Ensure that all packaging material is removed.

2. Inspect the Matrix Switch thoroughly for any shipping damage. Report any damage found in accordance with local procedures.

3. Compare the serial numbers on the Matrix Switch with the shipping documents. Report any discrepancy to the IBM branch office.

4. Determine at this point whether or not the installation should continue.

5. If installation can continue, then move the base unit or extension units to the installation position. Leave approximately 12.7 cm (5 in.) of free space between each unit.

6. The base unit may be installed at either the left or right end of the row.

   a. If you are installing a base unit, proceed to Section 6.0, "Installing a Base Unit."

   b. If you are installing an extension unit, proceed to Section 7.0 "Installing an Extension Unit."

Section 6.0 · Installing a Base Unit

1. Place the caster locks on the casters (PN 184886) (Figure 6-1).

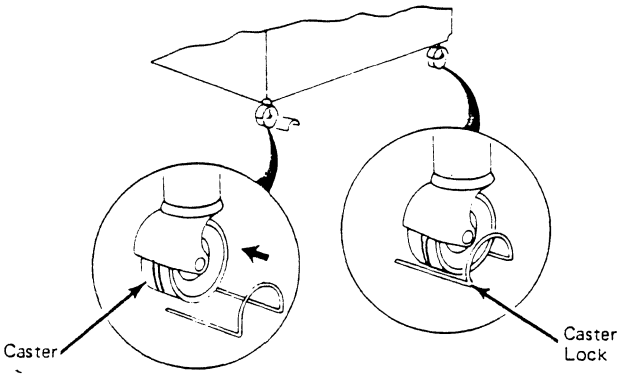

Figure 6-1. Placing Caster Locks on the Casters

2. Remove the rear door as follows:

   a. Open the rear door and disconnect the ground wire (Figure 6-2).

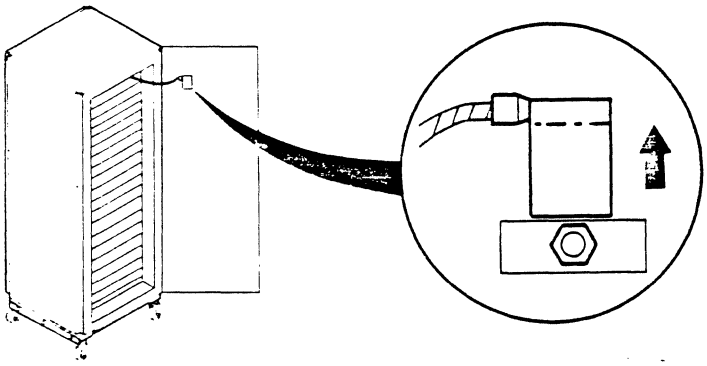

Figure 6-2. View of Ground Wire Location on Rear Door

   b. Lift the rear door straight up off the hinges, then slide the door to the right.

   c. Put the rear door in a safe, out of the way, place.

3. If there is an Extension Unit Control feature (Figure 6-3) verify that the UNIT NUMBER (frame number) dipswitch is set to 0. If necessary, set the dipswitches.

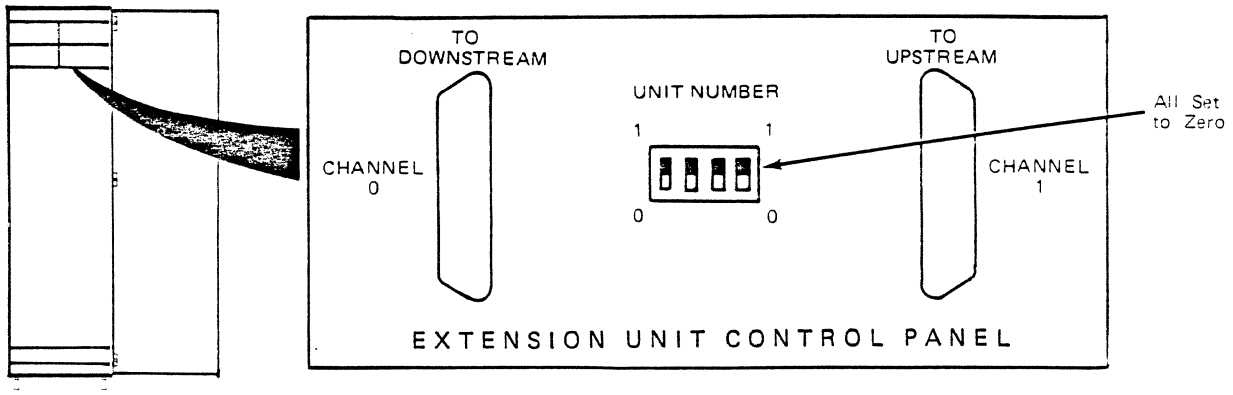

Figure 6-3. Extension Unit Control Panel

4. Set the baud rate on switch S1 (Figure 6-4) for the SCC (switch control console, IBM 3161) to 4800.

5. Set the baud rate on switch S1 for the SLP (switch logging printer, IBM 4201) to 9600.

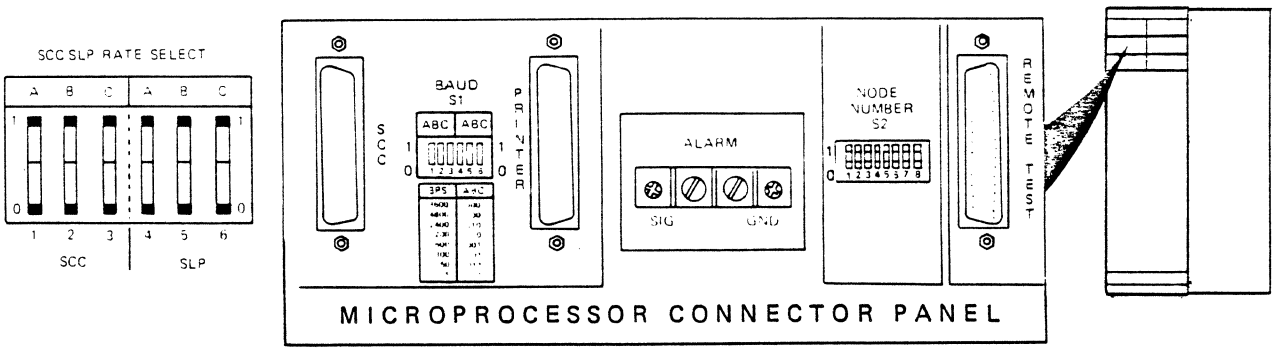

Figure 6-4. S1 Dipswitch Baud Rate Settings on the Microprocessor Connector Panel

6. Remove the card retainer bar (PN 6431234) in the card cage by pressing the center of the locking posts in with a blunt object (such as a pencil or pen). Slide the locking posts toward the center of the bar (Figure 6-5).

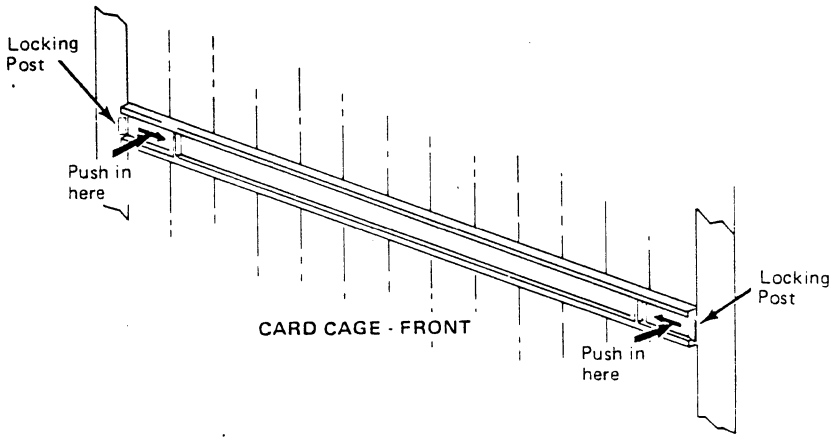

Figure 6-5. Removal of Card Retainer Bar

7. Obtain the node number for this Matrix Switch from the customer. Set switch S2 on the Microprocessor Connector Panel in the base unit and all attached extension units to this node number (Figure 6-6).

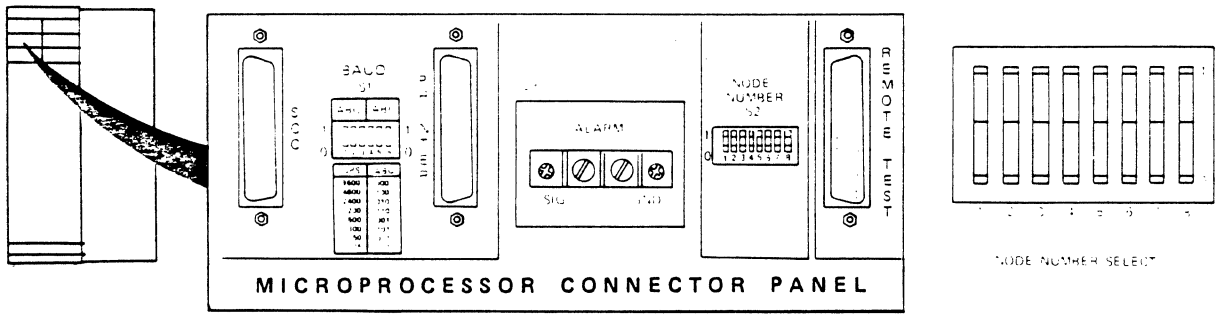

Figure 6-6. Node Number Switch Settings for the S2 Dipswitch

8. Switches 1 and 2 in the NODE NUMBER panel are not used and should always be set to the 0 position.

Note: Only 61 node numbers are valid. There are three invalid node numbers that cannot be used; 0, 3E, and 3F.

9. Switches 3 through 8 in the NODE NUMBER panel are set in the following binary positions:

S2 Position	3	4	5	6	7	8
Decimal Equivalent	32	16	8	4	2	1

Note: Position 8 is the least significant digit (1) and position 3 is the most significant digit (32).

10. Press the top half of the switch to select the binary 1 position or the bottom half of the switch to select the binary 0 position.

11. Enable the CMEM backup battery as instructed in jumpering procedure 9.5.

12. To assure proper seating of the logic cards, perform the following steps:

    a. Make sure the cards are turned off.

    b. Grasp the card extractors (black tabs) (Figure 6-7) on each card and pivot them out until the card is free from its mating connector.

    c. While holding the card extractors, pull the card halfway out. Verify that the card is properly aligned in the plastic card guides. (For Master Timing Cards, grasp the black knobs at the top and bottom of each card and pull the card out halfway.)

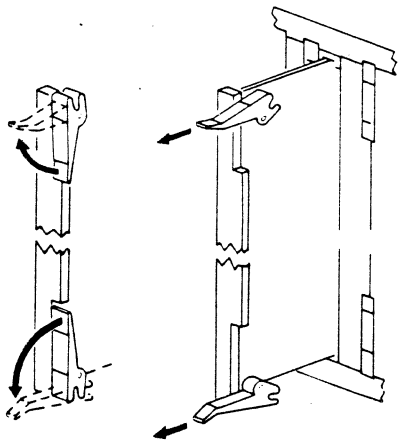

Figure 6-7. Removal of Logic Cards

d. Gently, push the card back into the card cage until it stops. If the card does not slide in easily, remove the card completely, and realign it in the plastic card guides. ***Do not*** force the card in as you may damage the connector edges on the card or the card cage.

e. Press the card extractors in until the card is properly seated and the card extractors are flush against the card.

Note: If any cards do not seat properly, report the problem to the IBM branch office.

13. Verify that all card power switches are in the ON Position.

Note: If you are installing extension units go to Section 7.0. If you are not installing extension units, continue with step 14.

14. Install the ground plates as follows. Open the front, bottom door and slide plate (PN 6431182) under the front of the machine below the door gasket (Figure 6-8).

15. Using three screws (PN 332620), three lock washers (PN 9092), and three flat washers (PN 45690) secure the plate while pressing the plate firmly against the floor. Tighten the screws.

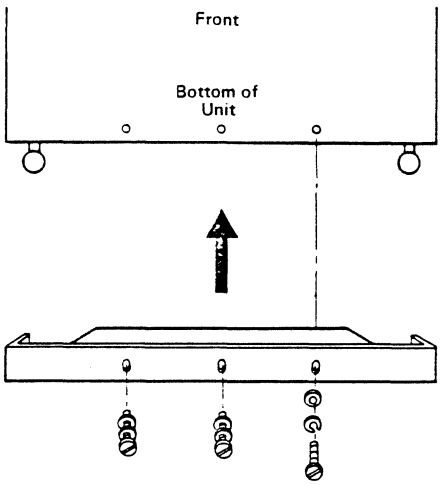

Figure 6-8. Installing the Front Ground Plate

16. Open the rear door and slide the ground plate (PN 6431183) under the rear of the machine below the location of the door gasket.

17. Using three screws (PN 332620), three lock washers (PN 9092), and three flat washers (PN 45690), secure the plate while pressing the plate firmly against the floor (Figure 6-9). Tighten the screws.

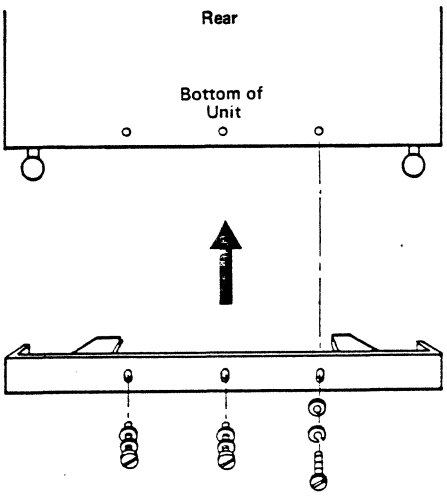

Figure 6-9. Installing the Rear Ground Plate

18. Slide ground plates (PNs 6431222 and 6431223) under the rightmost and leftmost side of the unit(s).

19. Using four screws (PN 332620), four lock washers (PN 9092), and four flat washers (PN 45690), secure the ground plate while pressing the plate firmly against the ground (Figure 6-10). Tighten the screws.

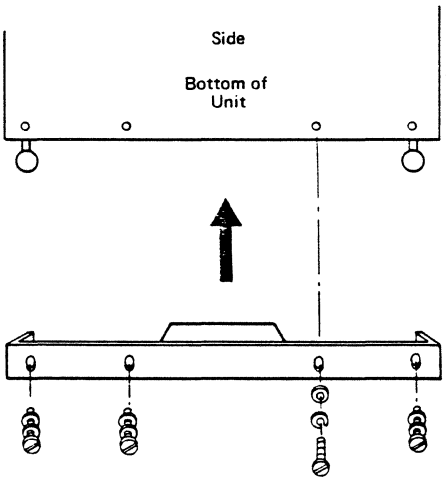

Figure 6-10. Installing the Side Ground Plate

21. Refer to Section 9.0 for card and I/O panel jumpering options.

21. Continue to Section 8.0.

Section 7.0 - Installing Extension Units

1. Place the caster locks on the casters (PN 184886) (Figure 7-1).

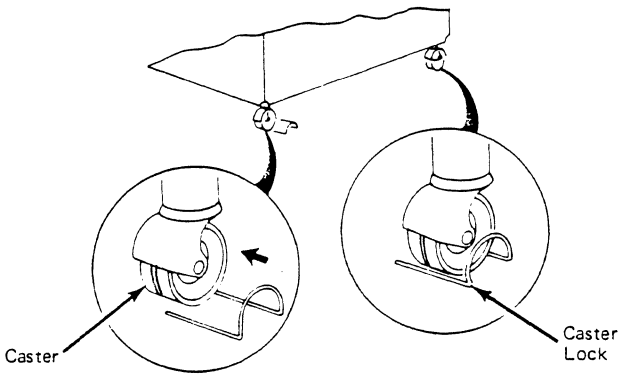

Figure 7-1. Placing Caster Locks on the Casters

2. Remove the side cover and inner ground shield from the left or right side of the base unit, depending on which side of the base unit the extension units are to be attached. (See Figures 7-2 and 7-3.)

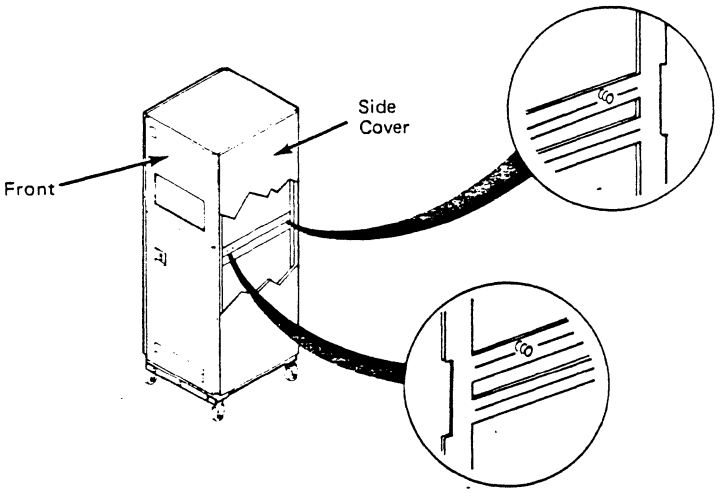

Figure 7-2. Location of Side Cover Securing Screws

3. Remove the screws that secure the inner ground shield on the right or left side of the base unit. (These covers are shipped only with the base unit.) Save the side ground shield and screws for later placement on the end extension unit.

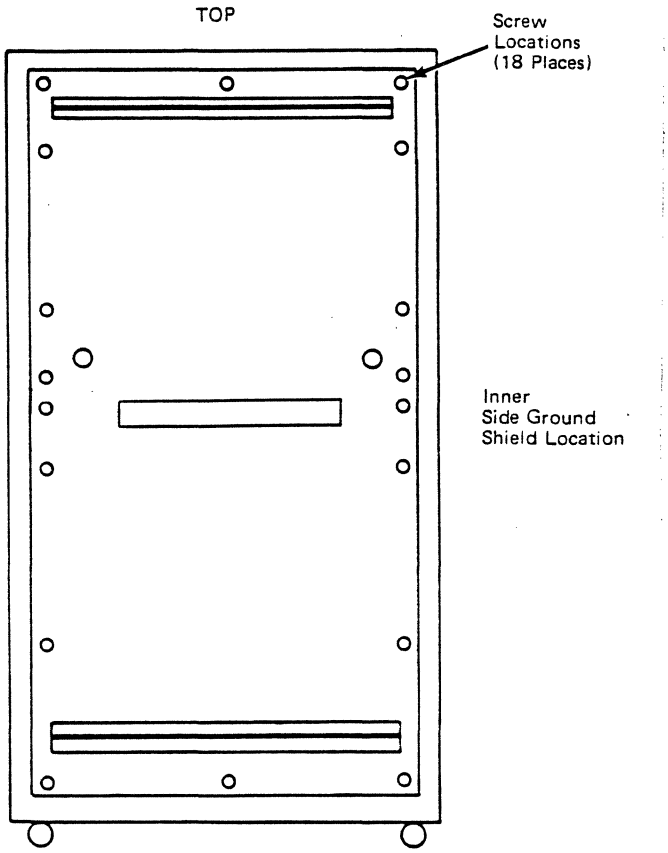

Figure 7-3. Inner Side Ground Shield Covers

4. Remove the rear door of the extension unit(s) by repeating the removal procedure detailed in steps 2.a through 2.c in Section 6.0.

5. Install the five-pin timing cables (PN 6431093) in each unit as follows (Figure 7-4):

   Note: The timing connectors are located on the Card Cage backplane near the DC power connector.

   a. Connect the loose end of the tie-wrapped timing cable (PN 6431093) to the TO DOWNSTREAM connector on the previous unit.

b. Verify that one end of the timing cable is connected to the FROM UPSTREAM connector on the extension unit.

c. Follow this procedure for each extension unit until the last extension unit is connected.

d. The last extension unit does not have a timing cable connected to its TO DOWNSTREAM connector.

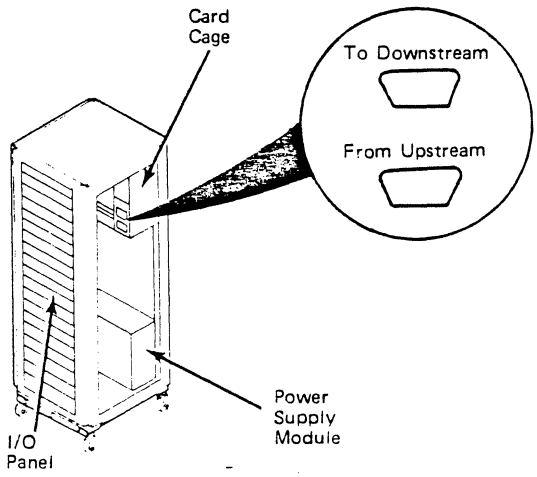

Figure 7-4. View of Timing Connectors on the Card Cage Backplane

6. The following procedure describes how to connect the Multiunit Switch/8 (MS/8) card interface cables between an added extension unit and an existing unit.

   Note: If the MS/8 feature is not installed or being installed, skip to step 7.

   a. Starting with extension unit 1, check each extension unit to determine if an MS/8 cable is attached to card slot positions B, C, D, and/or E at the rear of the card cage (Figure 7-5).

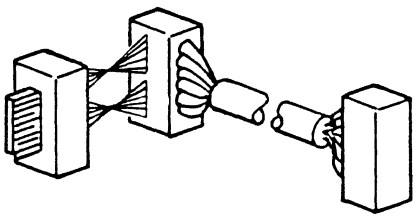

Figure 7-5. MS/8 Interface Cable

Warning: When installing the MS/8 interface (PN 6431086) cable between the two units in Figure 7-6, it is extremely important to position the cable so that the red wire is at the top of the cable. Otherwise, permanent damage may result to **all** of the MS/8 cards in the string.

b. When an MS/8 cable is located, plug the free end into the pigtail of the interface cable serving the same slot position in the previous unit.

   If no pigtail is present in the previous unit, but an MS/8 terminator card is installed in that card position, then that is the first card in the MS/8 chain. Plug the free end of the cable into the terminator card (Figure 7-6).

   MS/8 cable connectors are not polarized. Be sure that the red arrows point up, and that the red wire is at the top of the connector.

   Continue this process until the free ends of all MS/8 cables are connected, and the MS/8 chains are complete.

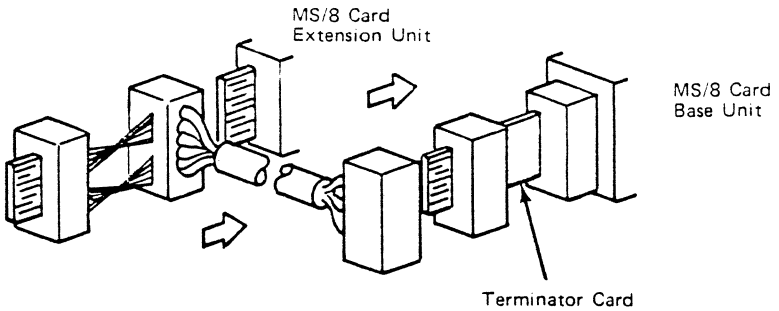

Figure 7-6. MS/8 Interface Cable Connection to Terminator Card

c. Verify that:

   - Each chain must begin and end with a terminator card.
   - Each MS/8 interface cable in the chain must connect the same slot position in adjacent units.
   - The protective cap is in place on the interface cable at the last extension unit (Figure 7-7).
   - All connector arrows and arrows on terminator cards point up.

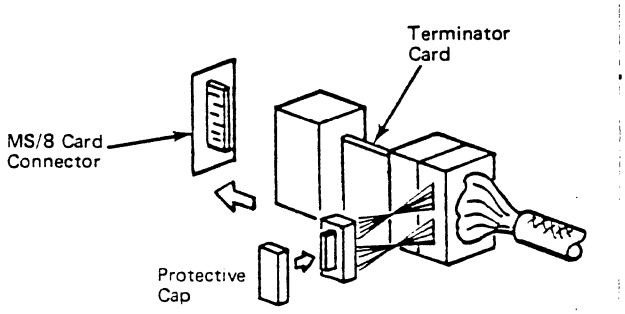

Figure 7-7. Terminator Card Connection on Last Extension Unit

7. Use the following procedure to connect the extension unit control (EUC) cables to the Extension Unit Control Panels as shown in Figure 7-8.

   a. Connect the free end of the EUC cable (PN 6431088) to the TO DOWNSTREAM connector on the Extension Unit Control Panel of the previous extension unit or base unit.

   b. Check that the opposite end connects to the TO UPSTREAM connector on the Extension Unit Control Panel of the new unit.

   c. Make these connections between each extension unit until the last extension unit is connected.

   d. Connect one end of the last extension unit's extension unit control (EUC) cable (PN 6431087, UC Loop cable) to its own TO DOWNSTREAM connector on the Extension Unit Control Panel.

   e. Connect the other end of the cable to the TO UPSTREAM connector on the base unit panel.

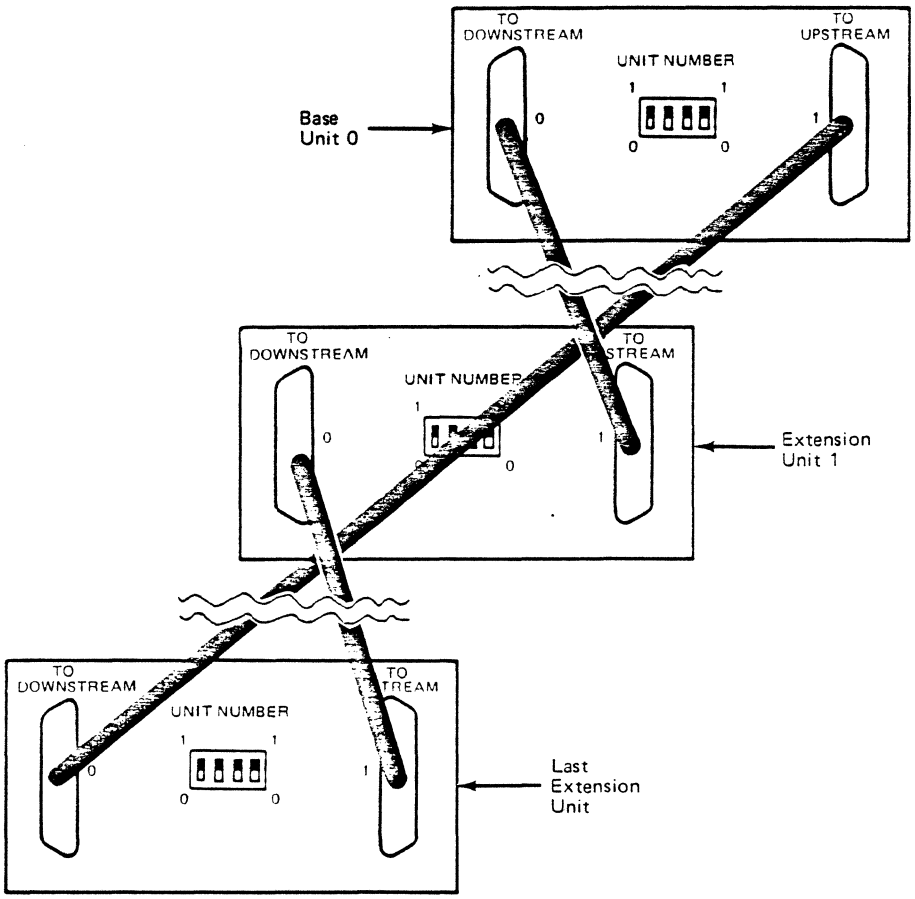

Figure 7-8. Extension Unit Control Cable Connections

8. Set the unit number switch on the Extension Unit Control panel(s) sequentially 0 through F with the base unit being 0 (Figure 7-9).

Note: Ensure that no two units have the same number.

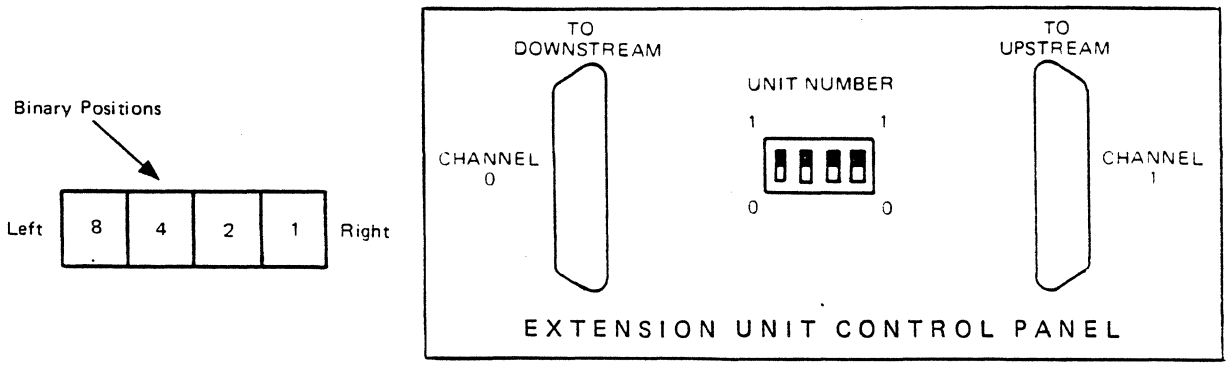

Figure 7-9. Extension Unit Control Panel with Binary Positions

Press a pointed object (such as a pen) against the lower half of the switch to select the 0 position or the upper half of the switch to select the 1 position. The numbering is in binary notation with the least significant digit (1) to the right and the most significant digit (8) to the left.

9. At this point, the procedures used to set baud rates for the S1 switch and to set Node Numbers for the S2 switch on the Microprocessor Connector Panel are exactly the same as those procedures used for installing the base unit. Refer to Section 6.0 and repeat steps 4 and 5 and 7 through 10.

10. Before bolting the extension unit, ensure that the timing cable(s), the extension unit control cable, and the Multiunit Switch/8 connector cables are not between the frame members of the existing base and extension units that are to be bolted together.

11. Connect the ground braids between card cages, using screws, star washers, and nuts.

12. Move the units, as required, to line up the bolt holes.

13. Before bolting the units together, the minicassette drive mounting plate or filler plate must be removed. To do so, perform the following steps.

    a. Open the card cage door and remove the ground strap (Figure 7-10).

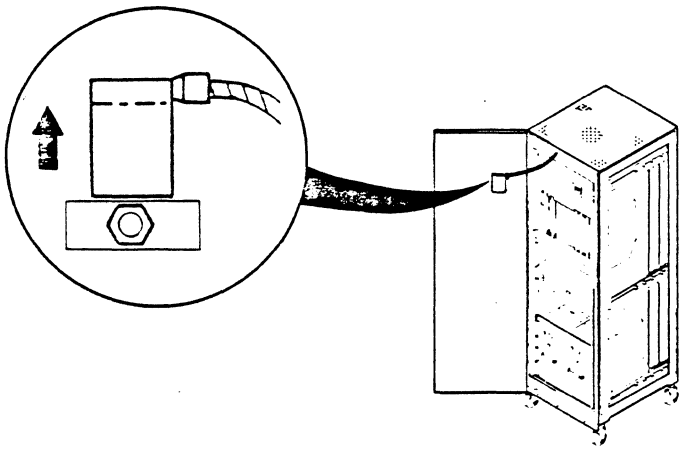

Figure 7-10. Ground Strap Location (Front)

    b. Remove the card cage door by lifting it straight up.

    Note: If the base unit is being installed at the right end of the switch, remove the card cage ground braid from the end extension unit and connect it between the base unit card cage and the first extension unit card cage.

c. Remove the four screws located at each corner of the mounting plate (Figure 7-11). Gently apply pressure at the inside of the mounting plate to release the plate from the adhesive tape binder located along the edge of the plate.

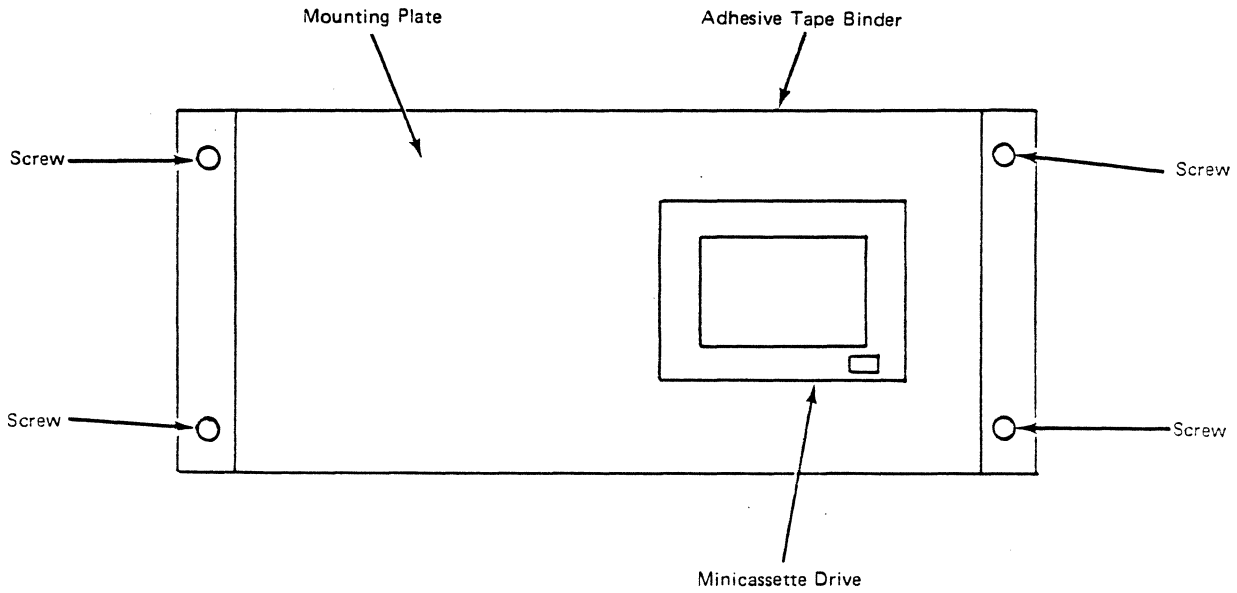

Figure 7-11. Minicassette Drive Subassembly, Front View

d. Tilt the mounting plate forward. If the plate is a filler plate, remove it and proceed to step 13. Otherwise, proceed to the next step.

e. Locate ribbon connectors J1 and J2 on the cassette adapter board (Figure 7-12).

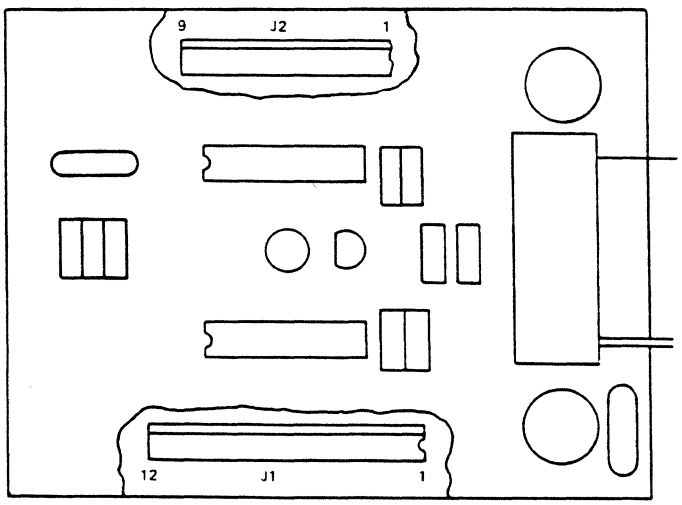

Figure 7-12. Cassette Adapter Board

Note: Observe the long portion of the black plastic cap and the white nylon protrusion on connectors J1 and J2 before disconnecting the connectors. The black plastic cap must always make contact with the nylon protrusion. This connection must be followed when reconnecting the cables to the cassette adapter board.

f. Disconnect cables J1 and J2 from the cassette adapter board.

g. Lift the mounting plate out and place it on a clean flat surface.

14. Loosely place a bolt, star washer, magnetic spacer, star washer, and nut in each of the six locations shown in Figure 7-13. Make sure the spacer and star washers are positioned correctly as shown in Figure 7-13. After all six locations (Figure 7-13) are installed, tighten the nuts.

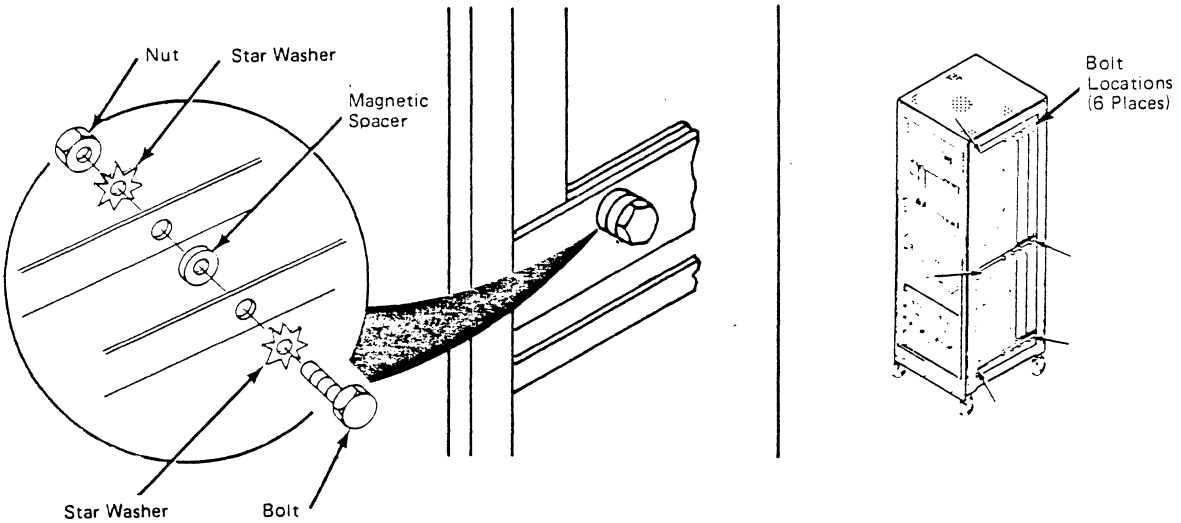

Figure 7-13. View of Units Bolted Together

15. To replace the mounting plate or filler plate, perform the following.

    a. Reposition the plate to its original position. If replacing a filler plate, proceed to step c, otherwise proceed to step b.

    b. Reconnect cables J1 and J2. **Remember, the black plastic caps on the cables must always make contact with the nylon protrusions** (Figure 7-12).

    c. Replace the four screws located at each corner of the plate (Figure 7-11).

    d. Replace the door by lowering it onto its hinges.

    e. Reconnect the ground strap removed in step 12.a.

16. Install the inner side ground shield cover removed from the base unit or the last extension unit (Figure 7-14) by performing the following.

    a. Start four screws in the unit at the corner positions.

    b. Position the ground shield over these screws.

    c. Install the remaining screws and tighten them.

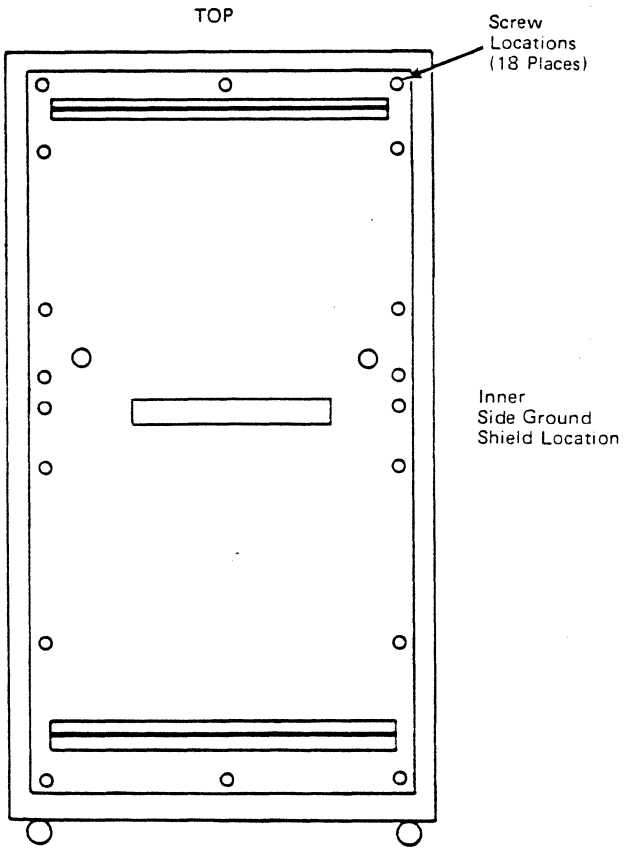

Figure 7-14.. Replacing Inner Side Ground Shield Covers

17. Take the base unit's side cover (removed from the base unit in step 2) and place it on the side of the last extension unit by doing the following:

    a. Line up the side cover with the side of the extension unit.

b. Lift the cover up and then slide it down into position on the side of the extension unit (Figure 7-15).

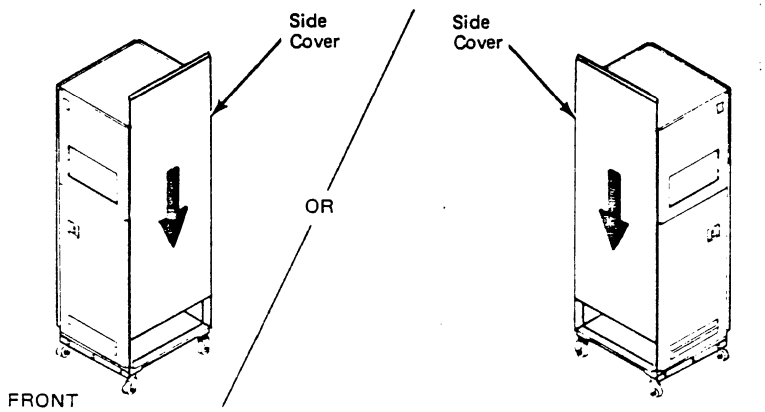

Figure 7-15. Side View of Last Extension Unit

c. Secure the side cover in place by reinserting the two screws and washers and then tightening them.

18. Remove the card retainer bar (PN 6431234) in the card cage by pressing the center of the locking posts in with a blunt object (such as a pencil or pen). Slide the locking posts toward the center of the bar (Figure 7-16).

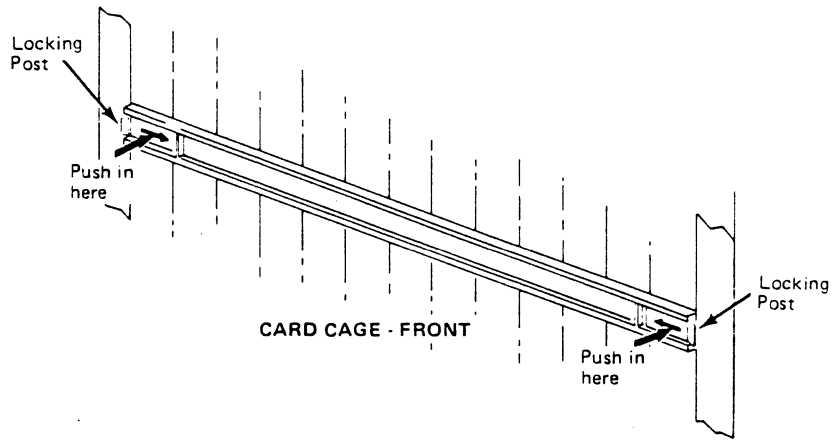

Figure 7-16. Removal of Card Retainer Bar

19. To assure proper seating of the logic cards in each extension unit, perform the following steps:

    a. **Make sure the cards are turned off.**

    b. Grasp the card extractors (black tabs) (Figure 7-17) on each card and pivot them out until the card is free from its mating connector.

    c. While holding the card extractors, pull the card halfway out. Verify that the card is properly aligned in the plastic card guides. (For Master Timing Cards, grasp the black knobs at the top and bottom of each card and pull the card out halfway.)

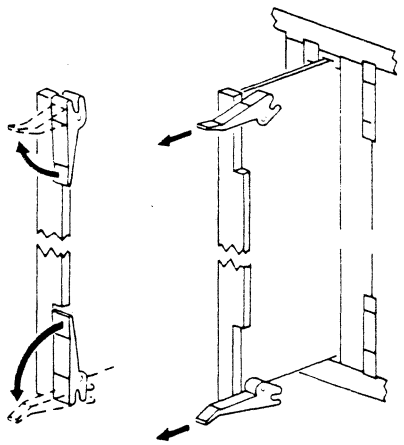

Figure 7-17. Removal of Logic Cards

    d. Gently, push the card back into the card cage until it stops. If the card does not slide in easily, remove the card completely, and realign it in the plastic card guides. ***Do not*** force the card in as you may damage the connector edges on the card or the card cage.

    e. Press the card extractors in until the card is properly seated and the card extractors are flush against the card.

20. Verify that all card power switches are in the ON position before turning the mainline power ON.

21. On each unit install the ground plates as follows. Open the front, bottom door and slide plate (PN 6431182) under the front of the machine below the door gasket (Figure 7-18).

22. Using three screws (PN 332620), three lock washers (PN 9092), and three flat washers (PN 45690), secure the plate while pressing the plate firmly against the floor. Tighten the screws.

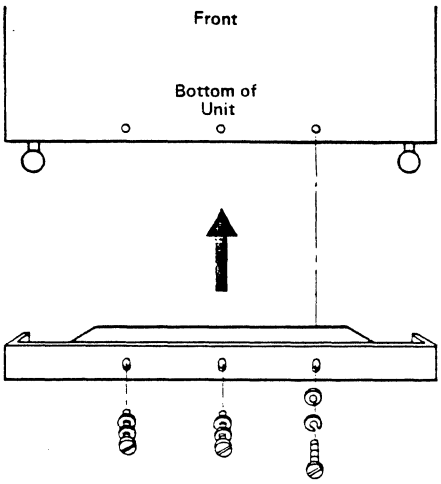

Figure 7-18. Installing the Front Ground Plates

23. Open the rear door and slide the ground plate (PN 6431183) under the rear of the machine below the location of the door gasket.

24. Using three screws (PN 33620), three lock washers (PN 9092), and three flat washers (PN 45690), secure the plate while pressing the plate firmly against the floor (Figure 7-19). Tighten the screws.

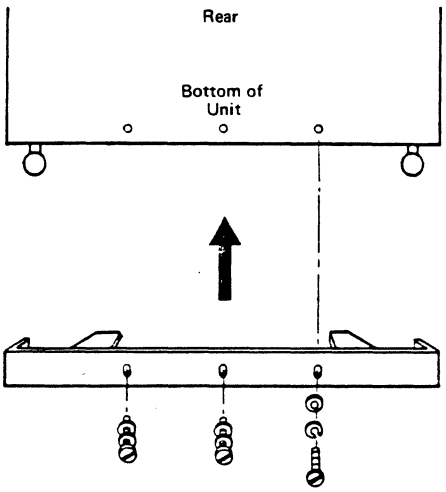

Figure 7-19. Installing the Rear Ground Plates

25. Slide ground plates (PNs 6431222 and 6431223) under the rightmost and leftmost side of the Matrix Switch.

26. Using four screws (PN 332620), four lock washers (PN 9092), and four flat washers (PN 45690), secure the ground plate while pressing the plate firmly against the ground (Figure 7-20). Tighten the screws.

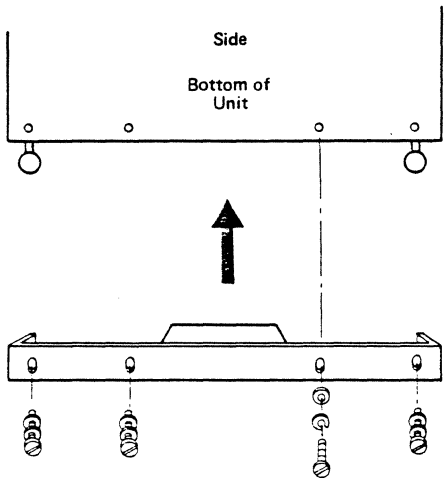

Figure 7-20. Installing the Side Ground Plates

27. Replace the rear door on each unit by lowering the door straight down until it is engaged on its hinges.

28. Resecure the ground wire removed in step 2 to each rear door.

29. Verify that all card power switches are in the ON position.

30. Refer to Section 9.0 for card and I/O panel jumpering options.

31. Go to Section 8.0

Section 8.0 - Connecting External Equipment

Note: The customer should have documented cabling information for all the cables on the Installation Planning Forms provided with the *IBM 3728 Communication Control Matrix Switch Installation Planning and Configuration Guide*, GA27-3641. If these forms are not available, the *Graphical Configuration Report* created by the System Engineer at ordering time should be used instead. (The customer and the servicing branch office are given copies of the report.) The Installation Planning Form and the *Graphical Configuration Report* (called cabling forms in this section) both provide external equipment connection locations.

Warning: The rear cover must close securely against the unit. When installing cables, it may be necessary to move the lower ends of the cable restraining bar side rails toward the I/O connector panel to allow the cables to clear the rear cover. The cables must not press against the rear cover. To adjust the cable restraining bars, refer to procedure 8.16.

Note: DCE connectors are female connectors. DTE connectors are male connectors.

8.1 Connecting the Switch Control Console

Note: The switch control console must be located within 6 meters (20 ft) of the Matrix Switch, unless a support processor is installed within 6 meters (20 ft) of the Matrix Switch.

If you are installing a switch control console, unpack and prepare the switch control console for attachment to the Microprocessor Connector Panel using the instructions supplied with the console. Connect one end of the switch control console cable to the switch control console. Set the SCC baud rate to 2400 bps for a 3161 console.

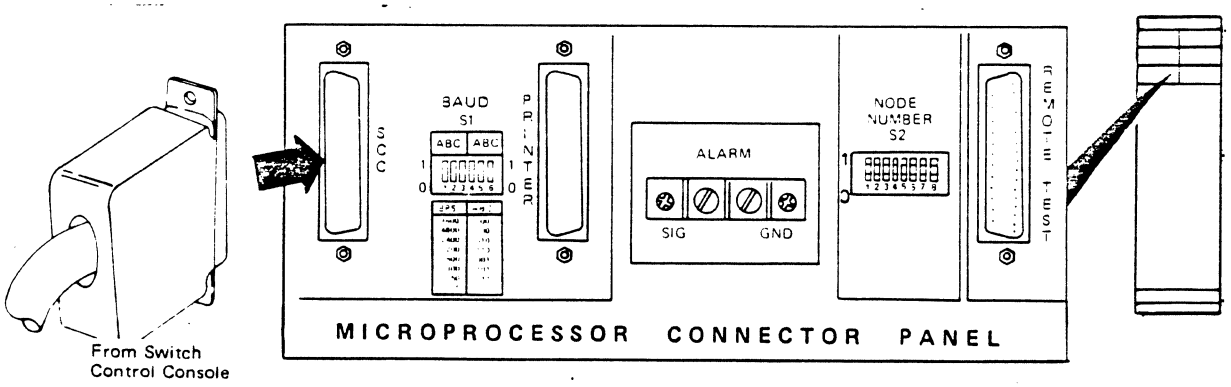

Figure 8-1. Switch Control Console Cable Connection to Microprocessor Connector Panel

8.2 Connecting the Support Processor

1. Follow the assembly instructions for the IBM PC/XT that are found in the *IBM Personal Computer XT Guide to Operations*, 613785.

2. Connect one end of an NCI cable (PN 6431052, PN 6431053, or PN 6431196) to the COM1 asynchronous port (DTE connector) on the PC/XT. Connect the opposite end to a port on the Network Control Interface Panel (NCI)(Figure 8-2), as indicated on the cabling forms. The port is generally port 0.

   Note: If an SCC is not located within 6 meters (20 ft) of the Matrix Switch, ensure that the support processor is located within 6 meters (20 ft) of the Matrix Switch.

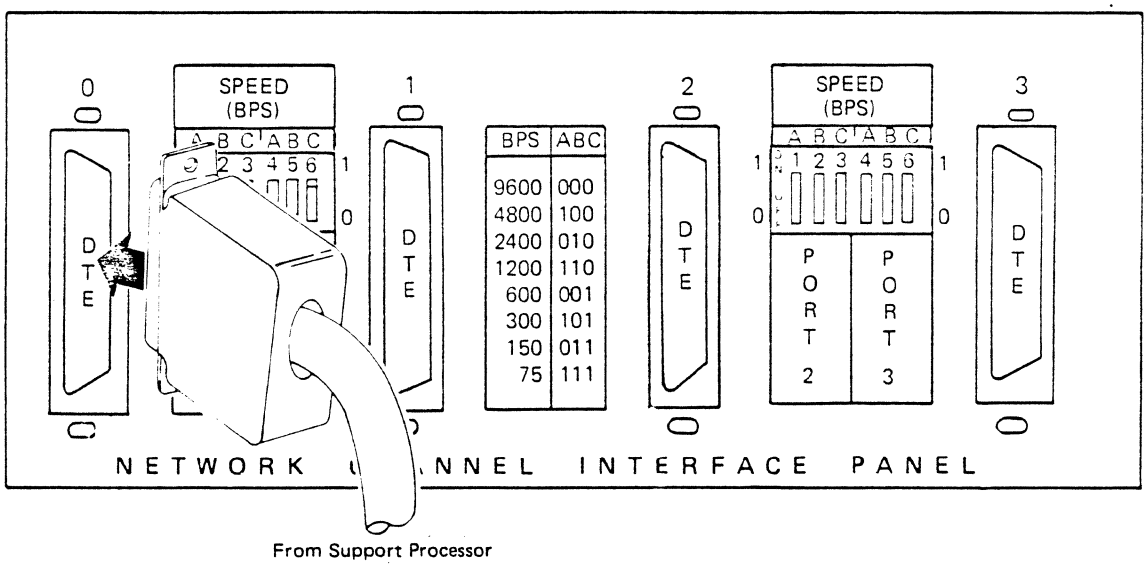

Figure 8-2. Connecting the Support Processor Data Cable to the NCI

8.3 Connecting the Support Processor for 3727 Emulation

Note: If the support processor is connected to the 3725 primary console port, then ensure that the support processor is within 6 meters (20 ft) of the 3725.

1. Connect the primary (PN 6431054) or alternate (PN 6431195 or PN 6531055) cable to the primary (PRI) or alternate (ALT) maintenance and operator subsystem (MOSS) port on the communication controller according to the cabling forms. (See Figure 8-3.)

2. Connect the EIA (DTE) "D" connector end of the selected connector cable to an available DCE I/O port on the I/O Port Connector Panel according to the cabling forms. Repeat steps 1 and 2 for every 3725.

3. **Connect cable (PN 6431050, PN 6431056, or PN 6431057) to the COM2 communication adapter port of the IBM PC/XT.**

4. Connect the EIA (DTE) "D" connector on other end of the cable (PN 6431050, PN 6431056, or PN 6431057) to another available DCE I/O port on the I/O Port Connector Panel as indicated on the cabling forms.

5. Remove the EIA/8 card that controls the DCE I/O ports used for 3727 console emulation connections. Set switch S2 to the ON position for all ports used for 3727 console emulation (refer to step 4 of procedure 9.1.3). This allows the DTR signal to be passed.

6. Refer the customer to the *IBM 3728 Communication Control Matrix Switch Support Processor Operations Guide*, GA27-3644 to operate the Matrix Switch in the emulation mode and to verify that the alternate communication adapter speed is set to 2400 bps.

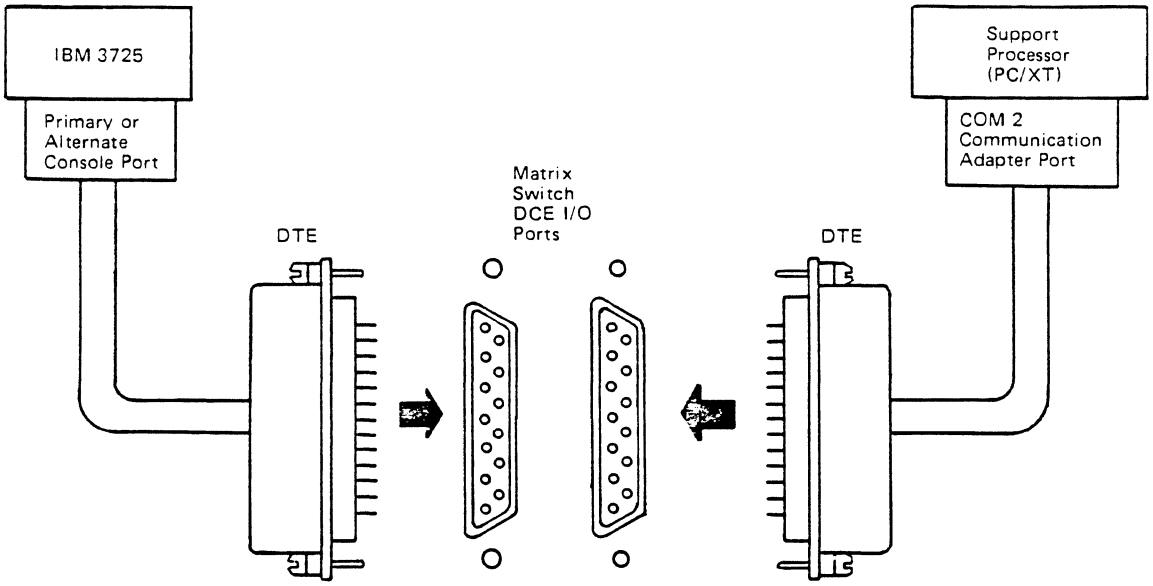

Figure 8-3. IBM 3727 Console Emulation Connection

8.4 Connecting the Switch Logging Printer

1. If you are installing a switch logging printer, unpack and prepare the switch logging printer for attachment to the Matrix Switch using the instructions supplied with the printer. The IBM 4201 printer baud rate should be set to 9600 and its flow control option should be set to DTR pacing, to match the options set on the Microprocessor Connector Panel SLP port.

2. Connect one end of the printer cable to the Microprocessor Connector Panel (Figure 8-4) as indicated on the cabling forms and connect the other end of the cable to the switch logging printer.

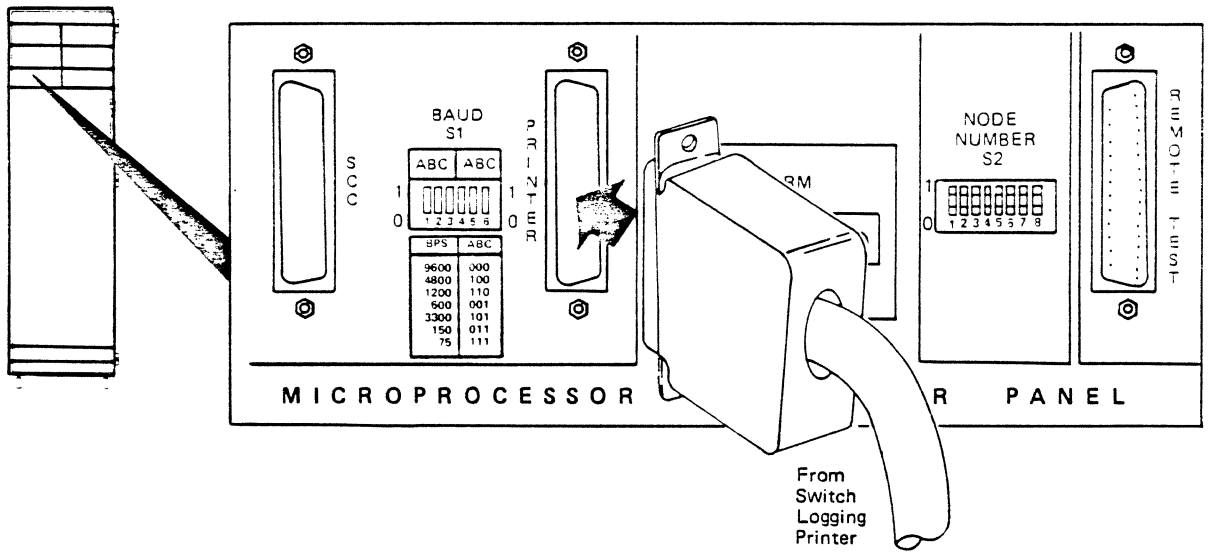

Figure 8-4. Switch Logging Printer Cable Connection to Microprocessor Connector Panel

8.5 Connecting Network Control Interface (NCI) Cables

For Colocated Matrix Switches:

1. Connect one end of an NCI cable (PN 6431052, PN 6431053, or PN 6431196) to an available NCI port on the NCI connector panel of one Matrix Switch as indicated on the cabling forms.

2. Connect the other end of the NCI cable to an available NCI port on the NCI connector panel of the other Matrix Switch.

3. Set the speed (Figure 8-5) for both NCI ports used to the same value (9600 bps maximum).

For Remotely Located Matrix Switches:

1. Connect one end of an EIA Cable to an available NCI port on the NCI connector panel as indicated on the cabling forms.

2. Connect the other end of the EIA cable to the modem being used for NCI communication.

3. Set the speed (Figure 8-5) for the NCI port to the same speed as the modem being used (9600 bps maximum).

   Note: The total bit rate that the NCI can support is 9600 bps. This rate can be divided among those NCI links actually in use. For example, if you are using one link to a remote site, you may use a bit rate up to 9600 bps. When using two links, drop the rate to 4800 on each. When using eight links, the bit rate on each must not exceed 1200 bps. When connecting to a support processor, set the bit rate to 2400 bps.

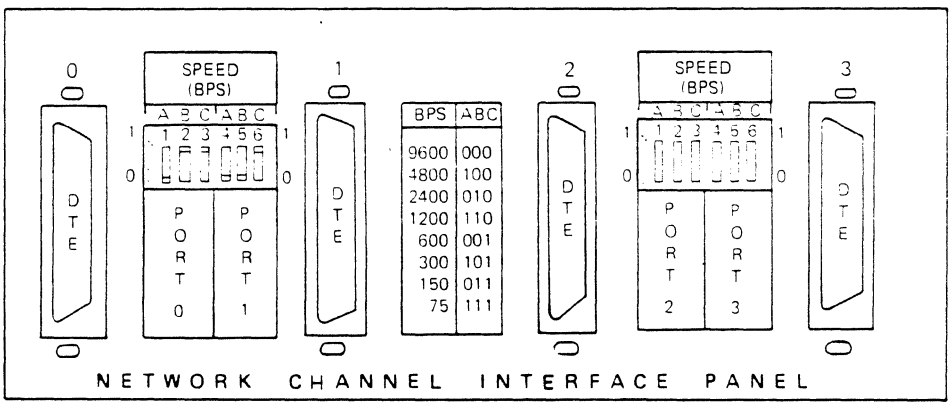

Figure 8-5. Network Control Interface Panel

8.6 Connecting the Remote-Test Modem

1. If you are connecting a Remote-Test Modem, connect the DTE end of the EIA cable to the Remote-Test modem's DCE connector .

2. Connect the DCE end of the EIA connector cable to the Microprocessor Control Panel Remote-Test DTE port (Figure 8-6).

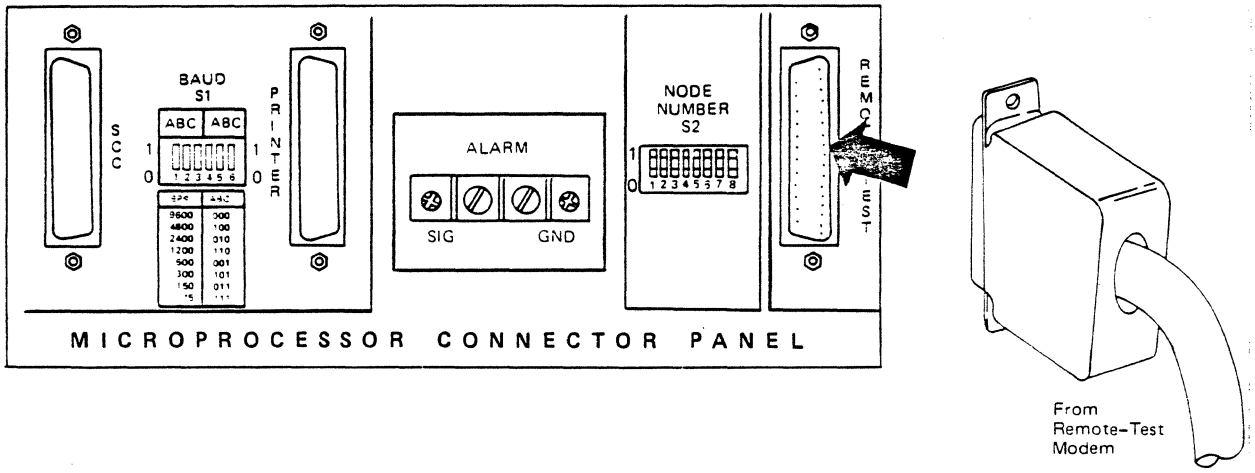

Figure 8-6. Remote-Test Modem DTE Cable Connection to Microprocessor Connector Panel

8.7 Connecting Data Cables

Note: It is recommended that the cables are installed starting at the bottom of the unit.

Get the completed cable Installation Planning Forms from the customer. These forms identify the EIA cable connections to the various ports. (Refer to the note located directly after the main section head 8.0.)

8.7.1 Connecting DTEs (Terminals)

1. Connect the DCE end of the EIA cable to the DTE device.
2. Connect the DTE end of the EIA cable to the DCE I/O port on the I/O Port Connector Panel at the rear of the Matrix Switch (Figure 8-7).

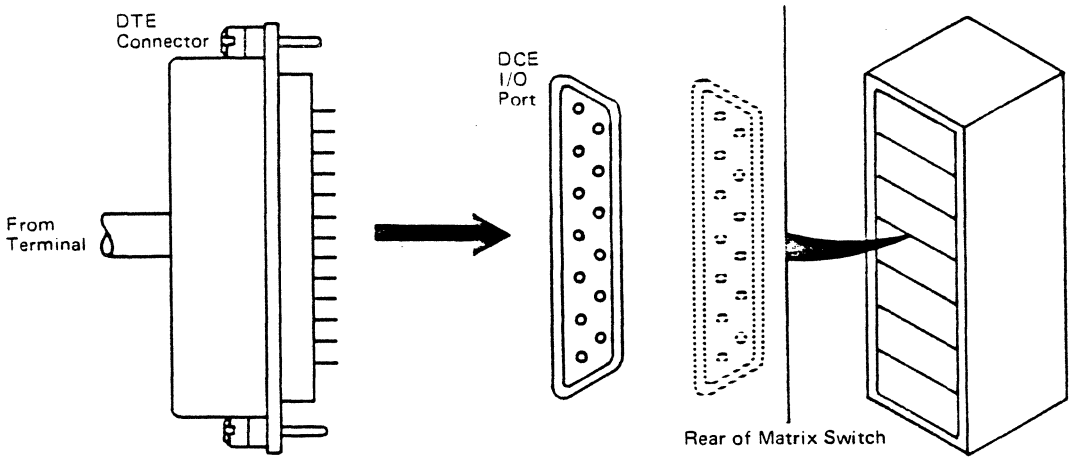

Figure 8-7. DTE Connection to DCE I/O Port on I/O Port Connector Panel

8.7.2 Connecting DCEs (Modems)

1. Connect the DTE end of the EIA cable to the DCE connector on the modem.

2. Connect the DCE end of the EIA cable to the DTE I/O port on the I/O Port Connector Panel at the rear of the Matrix Switch (Figure 8-8).

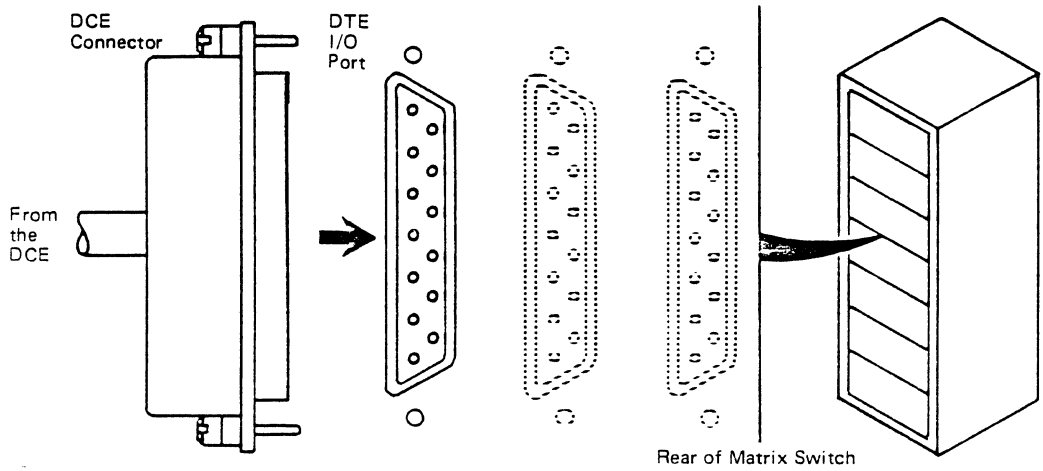

Figure 8-8. DCE Connection to DTE I/O Port on I/O Port Connector Panel

8.7.3 Connecting a Communication Controller With a Direct Attach Feature Cable

1. Remove existing hardware (nuts and washers) from the EIA (DCE) connector on the direct attach feature cable (Figure 8-9).

2. Install the screw hardware from accessory kit (PN 6431166) to the EIA (DCE) connector.

3. Connect the EIA (DCE) connector to the DTE I/O port on the I/O Port Connector Panel.

4. Connect the other end of the cable to a line interface connector on the communication controller.

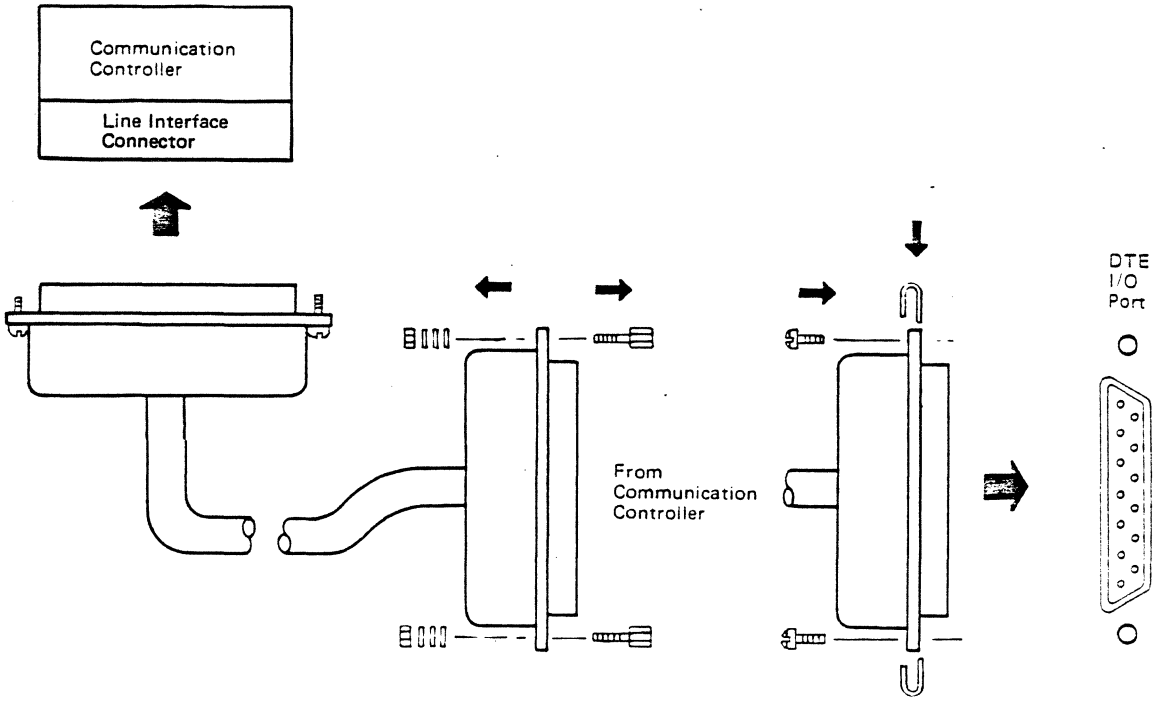

Figure 8-9. Connecting the Communication Controller to the Matrix Switch Using the Direct Attach Feature Cable

8.7.4 Connecting Communication Controllers Through the Matrix Switch Using Modem Attach Cables (Modem Eliminator)

1. Connect the DTE end of a communication controller modem attach cable to the DCE I/O port on the Matrix Switch I/O Port Connector Panel (Figure 8-10).

2. Connect the other end of the cable to a line interface connector on the communication controller.

Note: When attaching two communication controllers through the Matrix Switch without using the modem eliminator feature, it is required that one communication controller be connected with the direct attach feature cable and the other be connected with the modem attach cable. (It is recommended the communication controllers be attached using modem attach cables, and the Matrix Switch modem eliminator function be used whenever possible.)

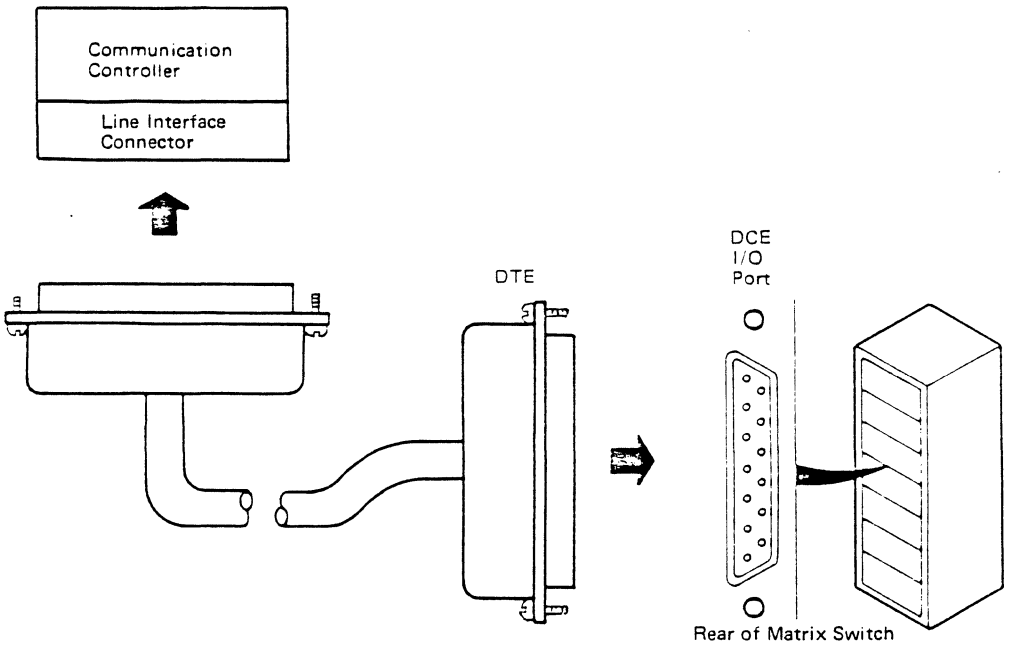

Figure 8-10. Connecting the Communication Controller to the Matrix Switch Using the Modem Attach Cable

8.7.5 Connecting a Communication Controller to a Modem Through the Matrix Switch

1. Connect the DCE end of an EIA cable to the DTE I/O port on the Matrix Switch I/O Port Connector Panel (Figure 8-11).

2. Connect the other end of the EIA cable to the DCE connector on the modem.

3. Connect the DTE end of a communication controller modem attach cable to the DCE I/O port on the Matrix Switch I/O Port Connector Panel.

4. Connect the other end of the communication controller modem attach cable to a line interface connector on the communication controller.

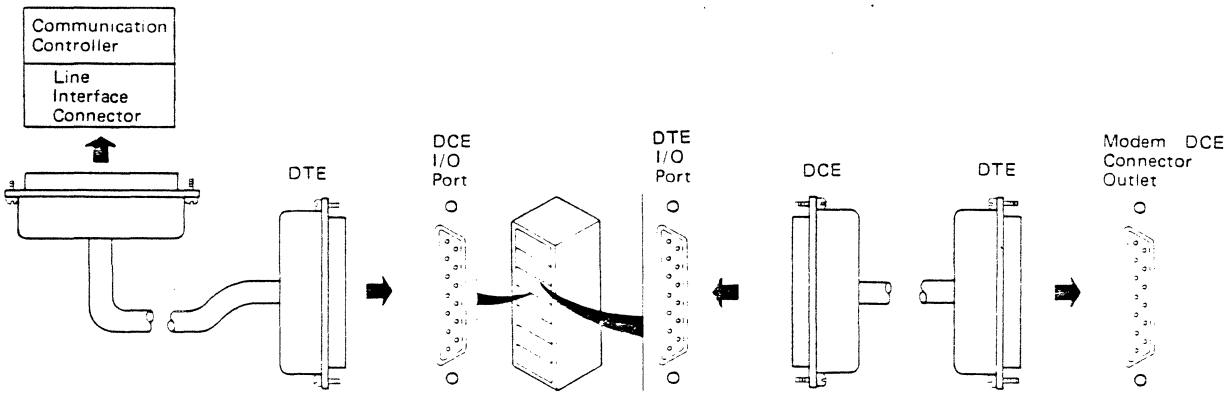

Figure 8-11. Connecting a Communication Controller to a Modem Through the Matrix Switch

8.8 Connecting VF Test Equipment to the Real-Time Monitor Ports

To connect VF test equipment to the real-time monitor ports, the VF monitor adapter is required (Figure 8-12).

1. Connect the VF monitor adapter to the real-time monitor I/O panel (ports 1 through 3).

   Note: It is recommended that port 0 be used only for digital monitoring.

2. Connect a four-wire VF cable from the VF monitor adapter to the external monitor test equipment.

   a. The terminals labelled **IN** are for monitoring the **RECEIVE** signal pair.

   b. The terminals labelled **OUT** are for monitoring the **TRANSMIT** signal pair.

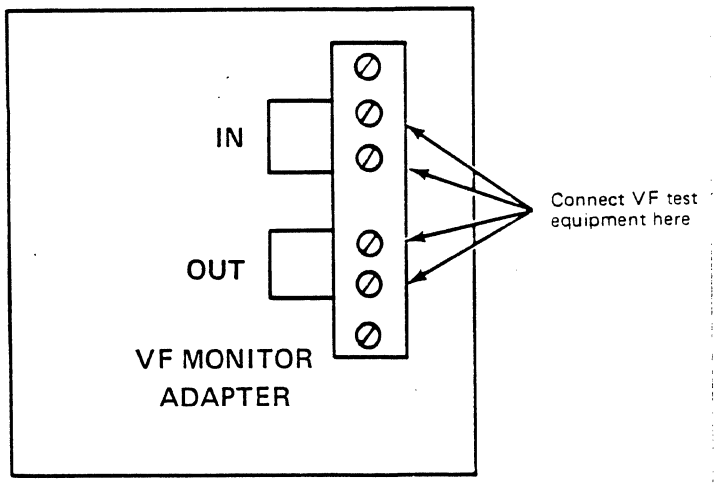

Figure 8-12. VF Monitor Adapter

8.9 Connecting the V.35 Real-Time Test Cables

The V.35 Real-Time Test (RTT) I/O Panel, at the rear of the IBM 3728 Matrix Switch, provides for connection of external test equipment. Make the following connections from the external test equipment to the RTT I/O Panel (Figure 8-13):

1. Connect either a V.35 or an EIA cable from the equipment to port 0 on the panel.

2. If a second piece of test equipment is to be attached, connect either a V.35 or an EIA cable from the equipment to port 1 on the panel.

3. Set the four-position dipswitch on the panel to select the EIA or V.35 connector that provides an active test interface, at ports 0 and 1, to the external test equipment. To select a V.35 I/O port, set switch A to 0 and B to 1.

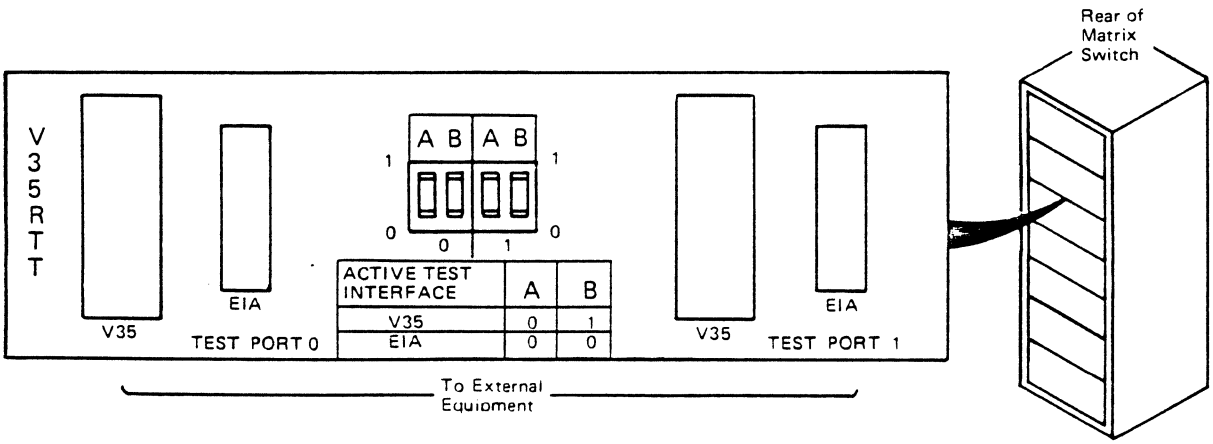

Figure 8-13. V.35 Real-Time Test I/O Panel

8.10 Connecting EIA Cables to the Real-Time Monitor (RTM) Ports

1. Connect the RTM/A/PTS adapter cable's (PN 6431180) connector (designated "A") to an available RTM I/O port.

2. Connect the other end of the cable's connector (designated "B") to the customer provided test equipment.

8.11 Connecting the Active/Passive Test Switch (A/PTS) Feature

1. Connect the RTM/A/PTS adapter cable's (PN 6431180) connector (designated "B") to a DCE I/O port on the Matrix Switch I/O Port Connector Panel (Figure 8-14.)

2. Connect the other end of this cable's connector (designated "A") to the Active I/O Port on the Matrix Switch A/PTS I/O Connector Panel.

3. Connect an A/PTS cable (DTE to DTE EIA cable) to an available RTM I/O port on the Matrix Switch RTM I/O Connector Panel.

4. Connect the other end of this cable's connector to the RTM I/O Port on the Matrix Switch A/PTS I/O Connector Panel.

5. Connect the RTM/A/PTS adapter cable's (PN 6431180) connector (designated "A") to the Test I/O Port on the Matrix Switch A/PTS I/O Connector Panel.

6. Connect the other end of the cable's connector (designated "B") to the customer provided test equipment.

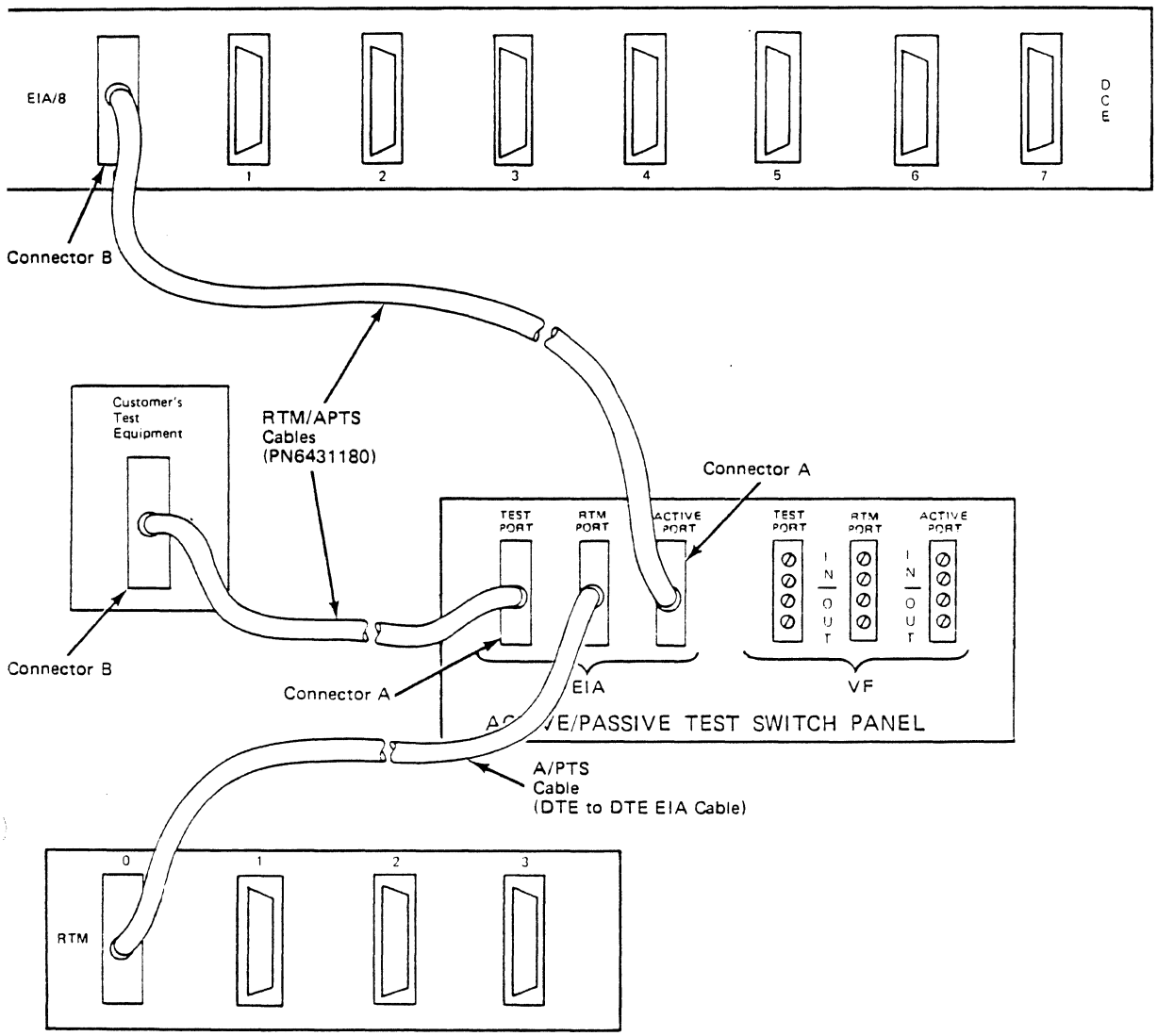

Figure 8-14. Active/Passive Test Switch Connections

8.12 Connecting the Active/Passive Test Switch Analog Interface

1. The connector marked "TEST PORT" is for connection of a 4 wire analog cable to the customer provided analog test equipment.

   Terminals marked "IN" signify INPUT to the Matrix Switch, while terminals marked "OUT" signify OUTPUT (Figure 8-15).

2. Connect a 4-wire cable from the connector marked "RTM PORT" to an available RTM Port equipped with an VF monitor adapter.

3. Connect a 4-wire cable from the connector marked "ACTIVE PORT" to an available Matrix Switch VF/16 port, as indicated on the cabling forms.

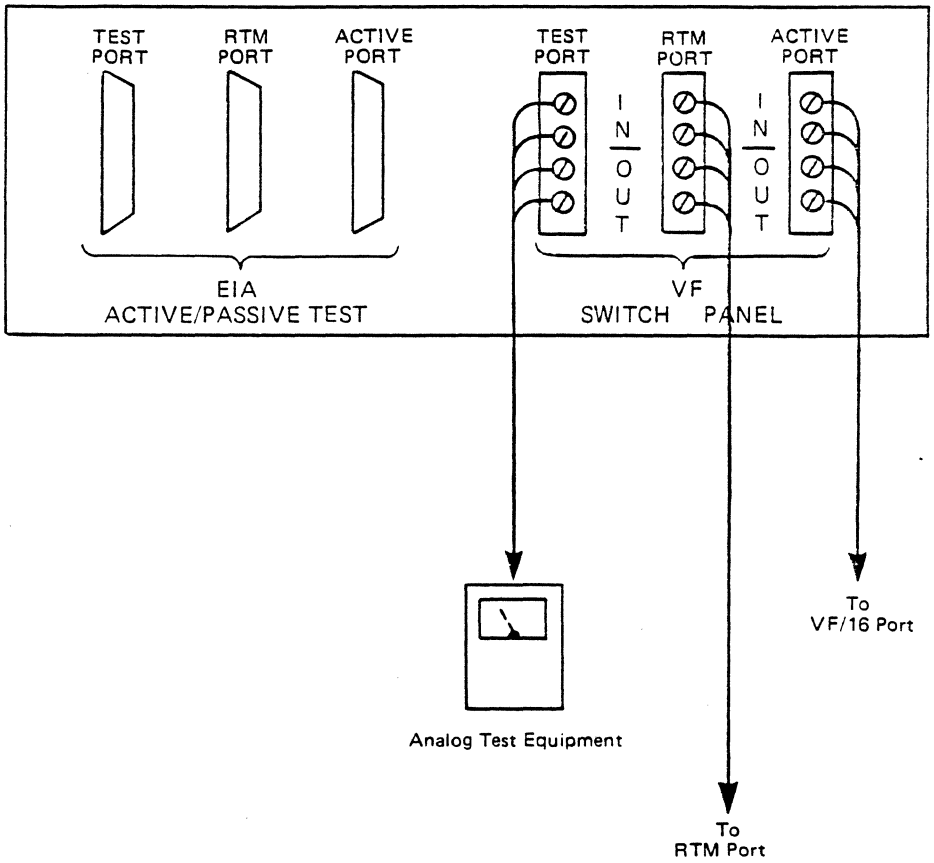

Figure 8-15. Active/Passive Test Switch Analog Interface

8.13 Connecting Modem Digital Service Units (DSUs) to the V.35 I/O Panel

To attach modems DSUs to the V.35 I/O Panel at the rear of the Matrix Switch:

1. Connect the V.35 cable to the modem's V.35 connector (Figure 8-16).
2. Connect the V.35 cable to the V.35 I/O Port on the DTE V.35 I/O Panel.

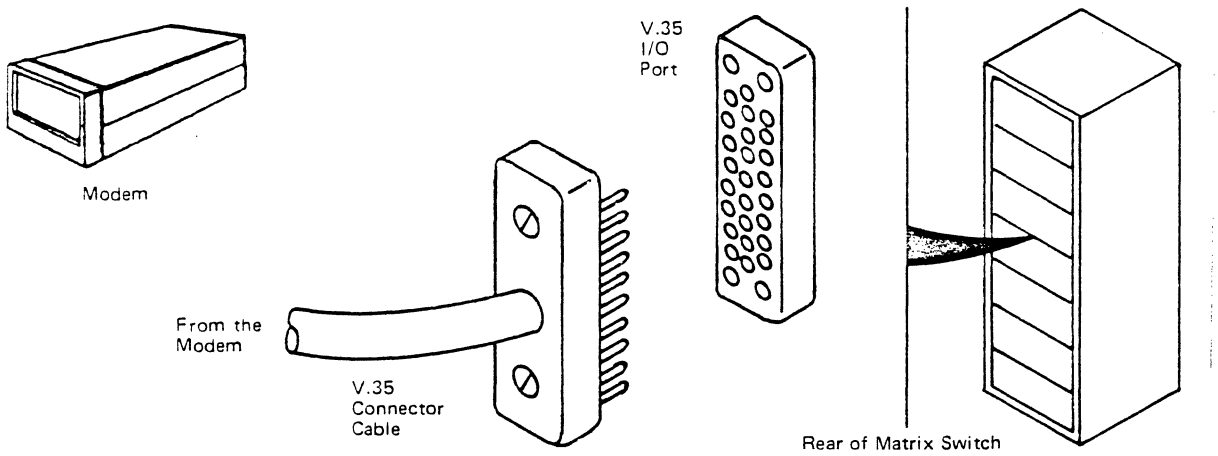

Figure 8-16. V.35 Modem Connection

8.14 Connecting Communication or Terminal Controllers to the V.35 I/O Panel

To connect the communication controllers to the V.35 I/O Panel at the rear of the Matrix Switch (Figure 8-17):

1. Connect one end of the V.35 connector cable to the V.35 connector on the controller.

2. Connect the other end of the V.35 connector cable to the V.35 I/O port on a DCE V.35 I/O Panel.

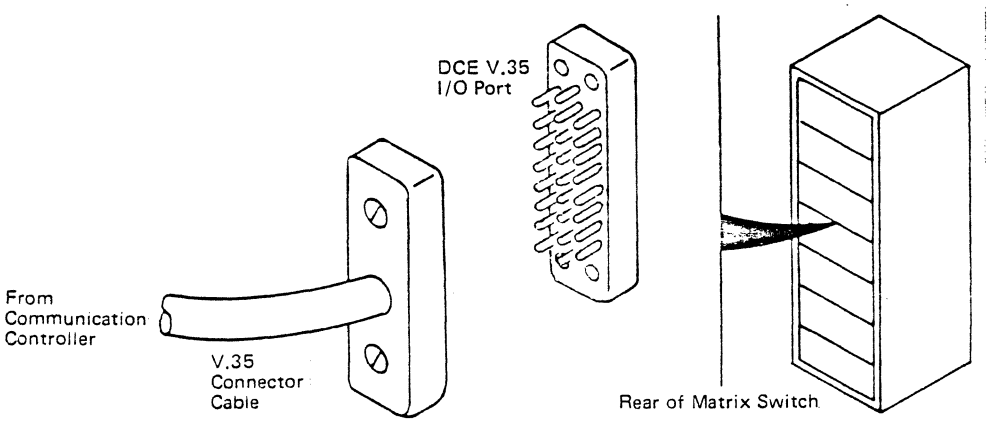

Figure 8-17. V.35 Terminal Connection

8.15 Analog Cable Installation

Note: The customer is responsible for connecting analog cables to the Matrix Switch. The following information is provided for reference.

At the VF/16 connector panel, at the rear of the Matrix Switch, terminals marked "IN" signify INPUT, and are connected to the TRANSMIT leads coming from a modem or the RECEIVE leads of a 4-wire telephone line. Terminals marked "OUT" signify OUTPUT, and are connected to the RECEIVE leads of a modem or the TRANSMIT leads of a 4-wire telephone wire.

8.16 Adjusting the Cable Restraining Bars

If after cable installation, the rear cover does not close securely against the unit, it is necessary to move the lower end of the cable restraining bar side rails toward the I/O connector panel. To do so, perform the following steps:

1. Loosen all four nuts (Figure 8-18).
2. Slide the bottom rails toward the I/O Connector Panel until the rear cover closes securely.
3. Tighten the nuts.

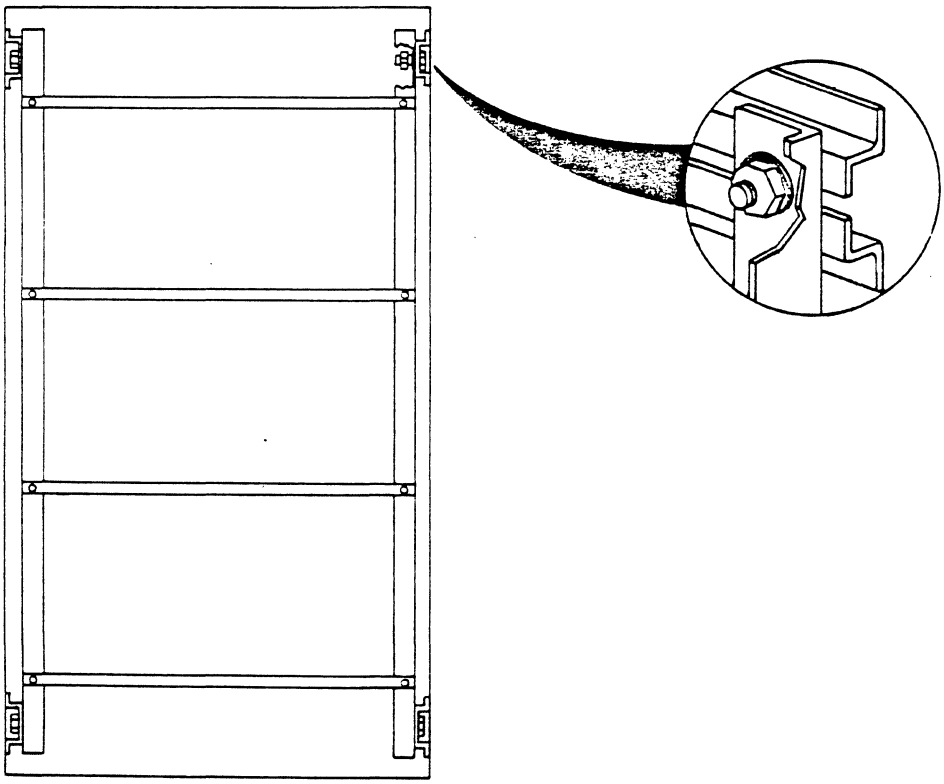

Rear of Matrix Switch

Figure 8-18. Nut Location, Cable Restraining Bars

Section 9.0 - Jumpering Options

For detailed instructions on jumpering options, refer to Chapter 5 of *IBM 3728 Communication Control Matrix Switch Maintenance Information Manual-1*, SY27-0273. Chapter 5 describes jumpering options that allow the user to select logic card parameters that comply with the user's requirements. These parameters include: card type selection, clock signals, power boost, signal pair transfer, and port card identification. The jumpering options are described for the following logic cards and I/O panels:

CAUTION
Use an ESD kit when handling the cards.

- EIA/8 port card
- Analog VF/16 port card
- V.35 port card
- Network control interface (NCI) card
- Microprocessor card
- Extension unit control (EUC) card
- Active/passive test switch (A/PTS) card
- EIA (V.24) DTE I/O panel
- EIA (V.24) DCE I/O panel
- V.35 DCE I/O panel.

9.1 EIA/8 Port Card

The EIA/8 port card features jumpering options. Figure 9-1 details the relationship between the jumper area and the port it controls, and illustrates the jumper area locations.

Use the procedures detailed in this section, 9.1, to select:

- Control of the DTR signal
- Internal on-board clock speed of the EIA/8 port
- Individual clock signals for individual ports (if required), and modem eliminator function.

9.1.1 EIA/8D Port Card

1. Consult the customer's Installation Planning Forms to determine the locations of EIA/8D cards in the Matrix Switch.
2. Refer to the diagram in Figure 9-2. Verify that the jumper settings for each EIA/8D card are correct.

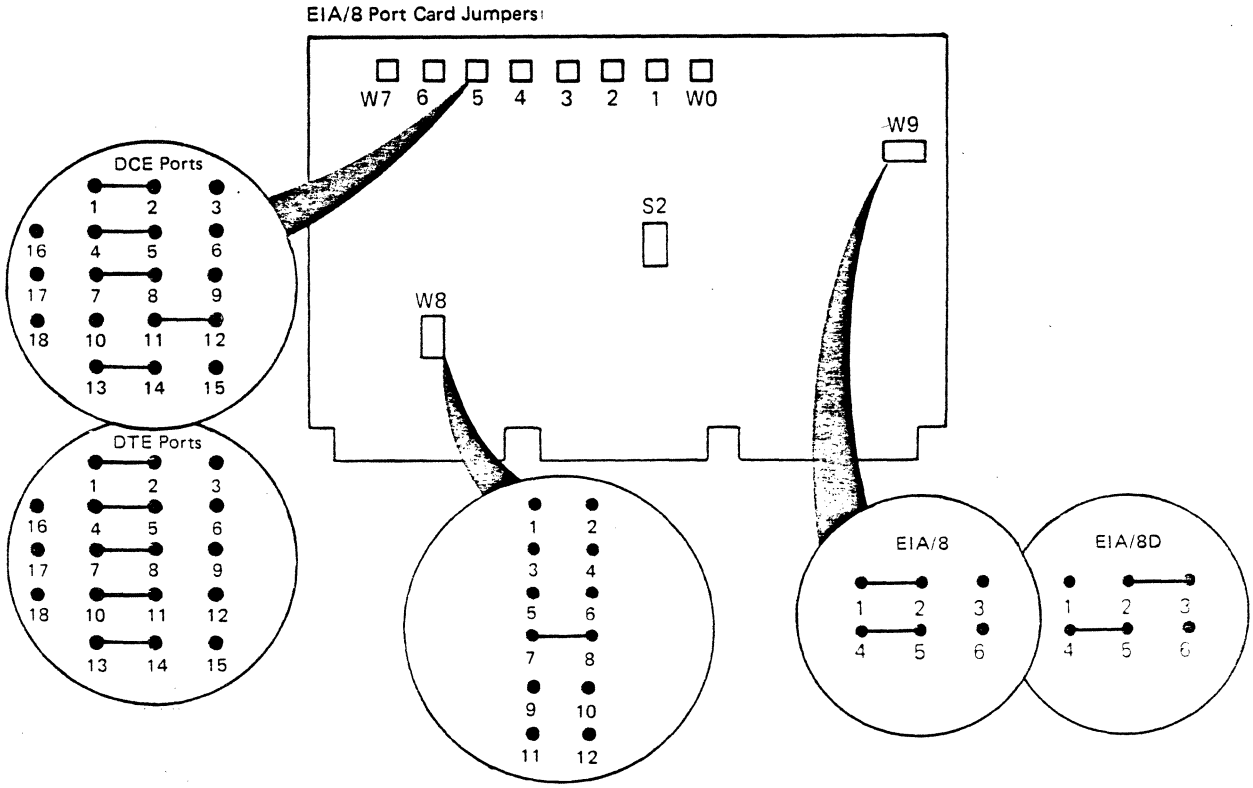

Figure 9-1. EIA/8 Port Card Default Jumpering Shown

Internal Clock W0 Through W7

JUMPER AREA	PORT CONTROLLED	PIN CONNECTIONS	
W0	0	10-11	PASS CLOCK
W1	1	11-12	PROVIDE CLOCK
W2	2	1-2	NO OPTION, REQUIRED FOR PORT OPERATION
W3	3	4-5	
W4	4	13-14	
W5	5		
W6	6		
W7	7		

S2

	DTE DEFAULT	DCE DEFAULT
	PASS DSR	GENERATE DTR
0	ON	OFF
1	ON	OFF
2	ON	OFF
3	ON	OFF
4	ON	OFF
5	ON	OFF
6	ON	OFF
7	ON	OFF

Card Internal Clock Rate W8

CLOCK RATE (KBPS)	PIN CONNECTIONS
Not Used	1 TO 2
Not Used	3 TO 4
19.2	5 TO 6
9.6	7 TO 8
4.8	9 TO 10
2.4	11 TO 12

W9	
1-2	EIA/8 (Single Slot Operation)
2-3	EIA/8D (Dual Slot Operation)
4-5	8 Port Operation (always jumpered)
5-6	4 Port Operation (not used)

Figure 9-2. EIA/8 Port Card Jumper Area Function

9.1.2 Internal On-Board Clock Speed of the EIA/8 Port

1. Consult the customer's Installation Planning Forms to select the internal on-board clock speed of the EIA/8 port.

2. Refer to jumper area W8 (Figures 9-1 and 9-2).

3. Clock rates from 2.4 to 19.2 kbps are available by using the jumpering option (9600 bps default).

9.1.3 Selection of Internal or External Clock Signals for Individual Ports

1. Consult the customer's Installation Planning Forms to decide whether or not individual clock signals for individual ports are required.

2. Jumper areas W0 through W7 are factory-jumpered as shown in Figure 9-1.

   a. EIA/8 DTE cards are factory-jumpered to receive clock signals from the modem (external clock), pins 10 and 11 connected.

   b. EIA/8 DCE cards are factory-jumpered to provide clock signals (internal clock), pins 11 and 12 connected.

      Note: The internal clock signal allows the Matrix Switch to act as a modem eliminator when connecting two DTE devices. On jumper areas W0 through W7, if pin 10 is jumpered to pin 11, the clock signal from the attached equipment, such as a modem, is passed through the port. If pin 11 is jumpered to pin 12, the Matrix Switch will insert both transmit and receive clocks using the internal clock signal. The recommended settings are: jumper pin 10 to pin 11 on DTE ports, and pin 11 to pin 12 on DCE ports. With this setting, the modem's clock is passed through normally whenever a DTE to DCE port connection is made. Whenever a DCE to DCE connection is made, the internal clock signal is automatically inserted and routed to each attaching device.

   Jumper area locations and the port controlled by the jumper area are detailed in Figures 9-1 and 9-2.

3. Verify factory jumpers connecting pins 1 to 2, 4 to 5, 7 to 8, 10 to 11 (DTE cards), 11 to 12 (DCE cards), and 13 to 14. Refer to MIM-1 for details on jumpering options.

4. To provide a DTR signal for modem elimination (direct attach), set the appropriate port switch S2 to OFF (provide). When the DTR signal is generated by a modem, set the appropriate port switch S2 to ON (pass).

Note: When dipswitch S2 is set to ON, a 0 setting is indicated. When S2 is set to OFF, a 1 setting occurs.

To obtain the decimal value of the switch settings, other than the switch positions for clock rates shown in Figure 9-5, use the following equation:

$$N = 256 - \frac{19.94484 \text{ MHz}}{(\text{Clock Rate})(4)}$$

where N = decimal value of switch settings on S2.

9.4 Network Control Interface (NCI) Card

1. If there is only one Network Control Interface Card in a base unit, pins 1 and 2 are jumpered in jumper areas W1 and W2 (Figure 9-6). This designates the card to be Card A.

2. If there are two Network Control Interface Cards in a base unit, the first card is designated Card A, as indicated in step 1. On the second card, pins 2 and 3 are jumpered in jumper areas W1 and W2. This designates the card to be Card B.

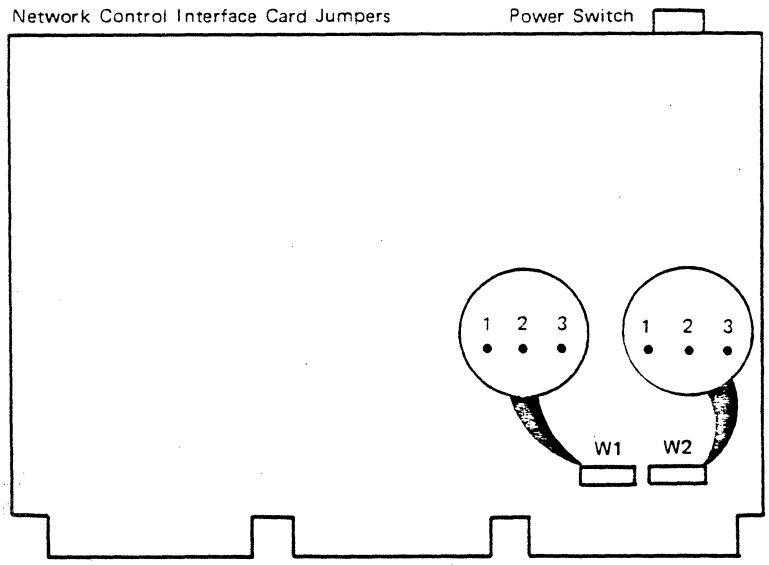

Figure 9-6. Network Control Interface Card Jumper Diagram

9.5 Microprocessor Card

1. Remove the primary microprocessor card from the card cage.

2. Locate jumper area W9 (Figure 9-7) and move the jumper from pins 1 and 2 (disable CMEM backup battery) to pins 2 and 3 (enable CMEM backup battery).

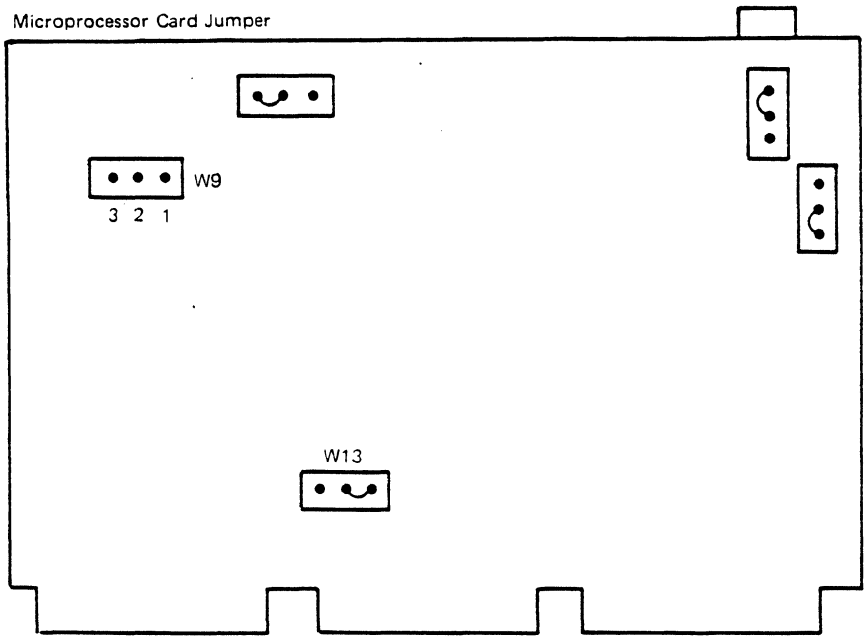

Figure 9-7. Microprocessor Card Jumper Diagram

3. Perform steps 1 and 2 for the secondary microprocessor card.

9.6 Active/Passive Test Switch (A/PTS) Card

A Matrix Switch unit may have up to four A/PTS cards. Each card has a unique jumper setting. The jumpers are factory set. Verify each jumper is in the correct position as shown in Figure 9-8.

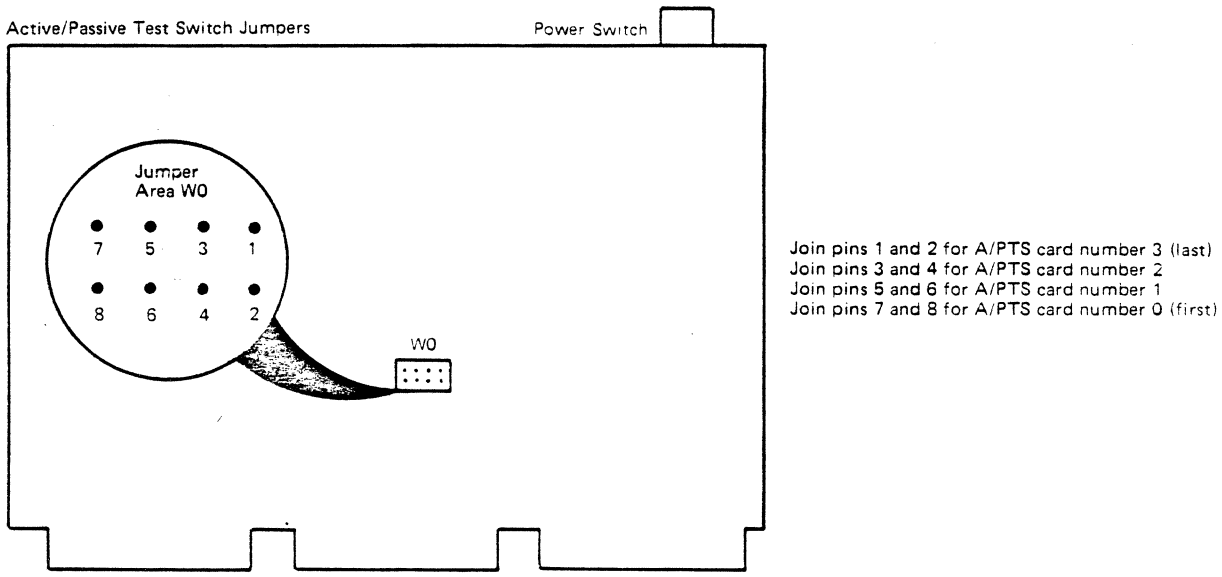

Figure 9-8. Active/Passive Test Switch Jumpers Factory Settings

9.8 EIA (V.24) DTE I/O Panel

Note: The EIA (V.24) DTE I/O panel must be partially removed before setting the jumpers on the I/O panel. To do so, perform the following procedure.

a. Open the rear door.

b. Locate the appropriate I/O panel.

c. Remove the four screws that secure the I/O Panel to the I/O panel frame (Figure 9-9).

d. Perform the jumper setting procedure.

e. Verify that star washers are in place between the frame and the I/O panel. Tighten the screws.

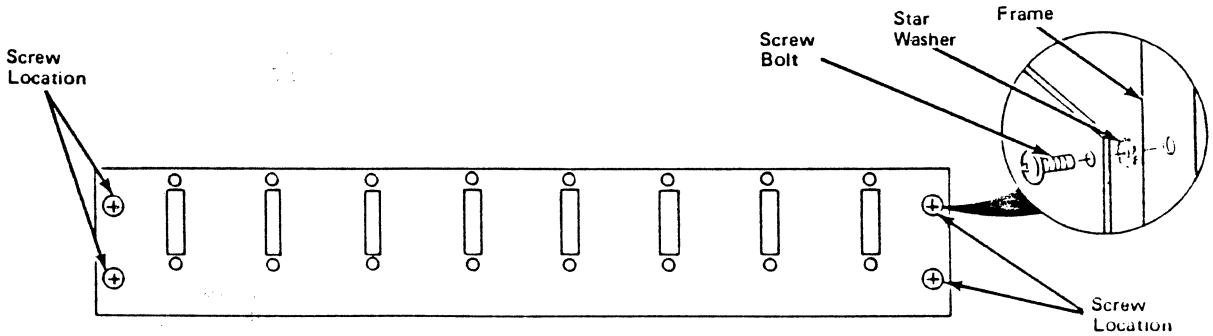

Figure 9-9. Screw Locations for I/O Panels

The EIA/8 (V.24) DTE I/O panel features jumpers that allow the EIA ports to pass either the New Sync (NS) or Data Rate Select (DRS) signals to support modems that use both signals. In addition, the I/O panel supports the option to pass both the NS and DRS signals simultaneously. Once jumpered, the DCE port must always connect to a DTE port. Figure 9-10 shows the EIA/8 (V.24) DTE I/O panel jumper diagram. Each port connection contains both a WX(N) and WY(N) jumper area.

1. To pass the NS signal, connect pins 2 to 3 at jumper area WX(N) and connect pins 1 to 2 at jumper area WY(N). It is necessary to connect the WY(N) jumpers to prevent two drivers circuits from driving each other.

2. To pass the DSR signal, connect pins 1 to 2 at jumper area WX(N) and leave the WY(N) jumper area disconnected.

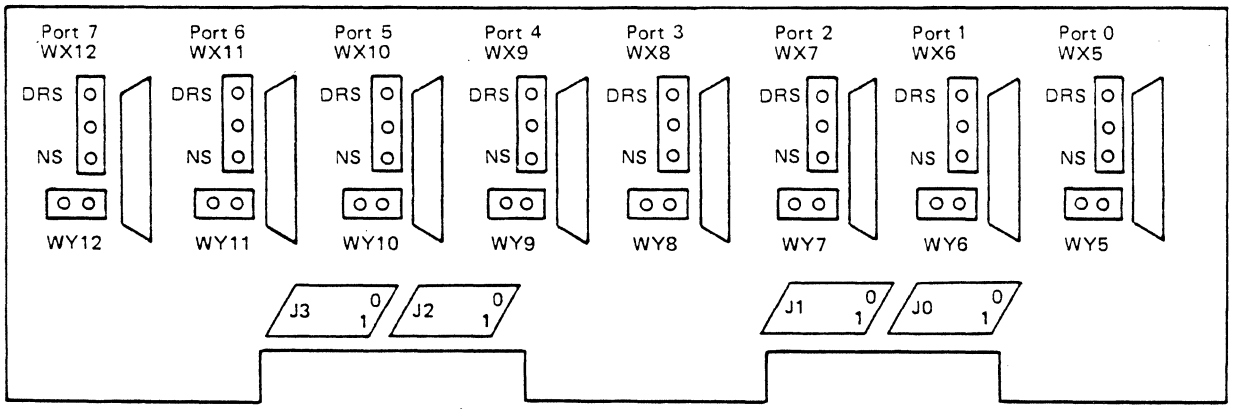

Figure 9-10. EIA/8 (V.24) DTE I/O Panel, Pin Side

9.8 EIA (V.24) DCE I/O Panel

Note: The EIA (V.24) DCE I/O panel must be partially removed before setting the jumpers on the I/O panel. To do so, perform the following procedure.

a. Open the rear door.

b. Locate the appropriate I/O panel.

c. Remove the four screws that secure the I/O panel to the I/O panel frame (Figure 9-11).

d. Perform the jumper setting procedure.

e. Verify that star washers are in place between the frame and the I/O panel. Tighten the screws.

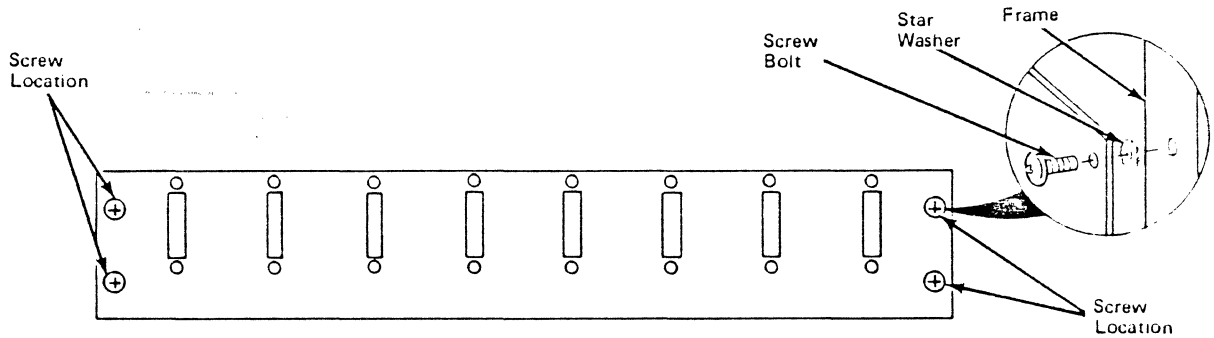

Figure 9-11. Screw Locations for I/O Panels

The EIA/8 (V.24) DCE I/O panel features jumpers that allow the EIA ports to pass the New Sync (NS) signal. Figure 9-12 shows the EIA/8 (V.24) DCE I/O panel jumper diagram. To pass the NS signal, connect pins 1 to 2 at jumper area WX(N).

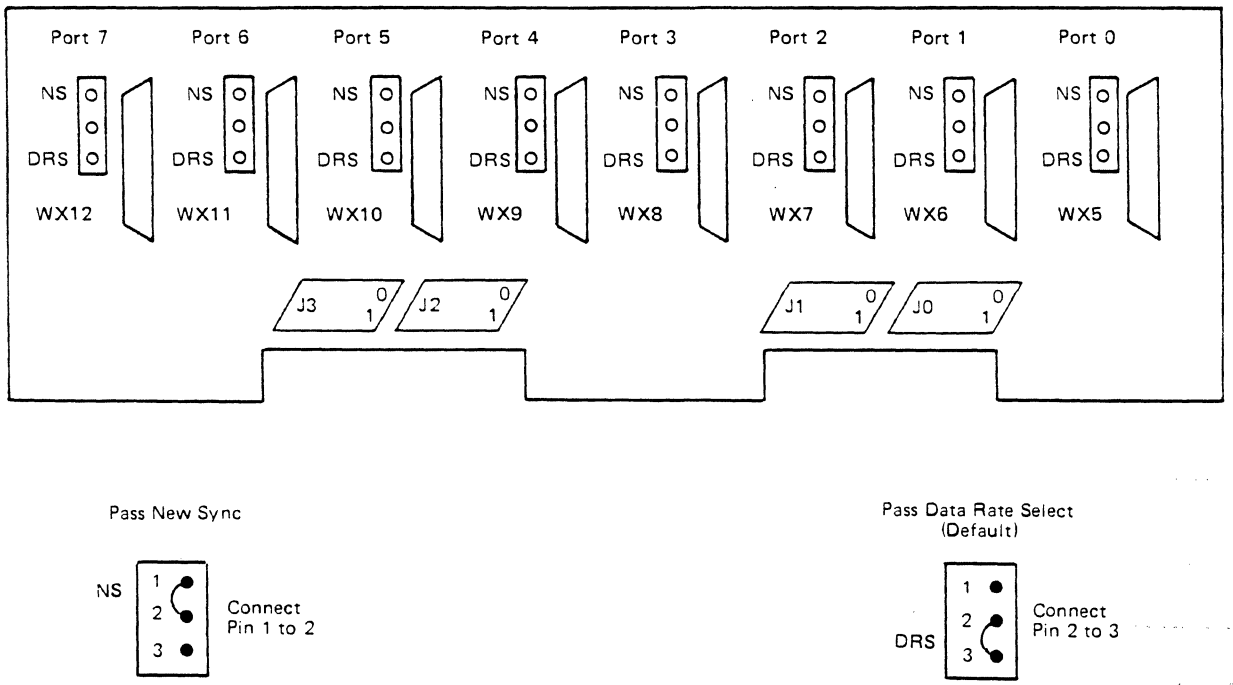

Figure 9-12. EIA/8 (V.24) DCE I/O Panel, Pin Side

9.9 V.35 DCE I/O Panel

Note: The V.35 DCE I/O panel must be partially removed before setting the jumpers on the I/O panel. To do so, perform the following procedure.

a. Open the rear door.

b. Locate the appropriate I/O panel.

c. Remove the four screws that secure the I/O panel to the I/O panel frame (Figure 9-13).

d. Perform the jumper setting procedure.

e. Verify that star washers are in place between the frame and the I/O panel. Tighten the screws.

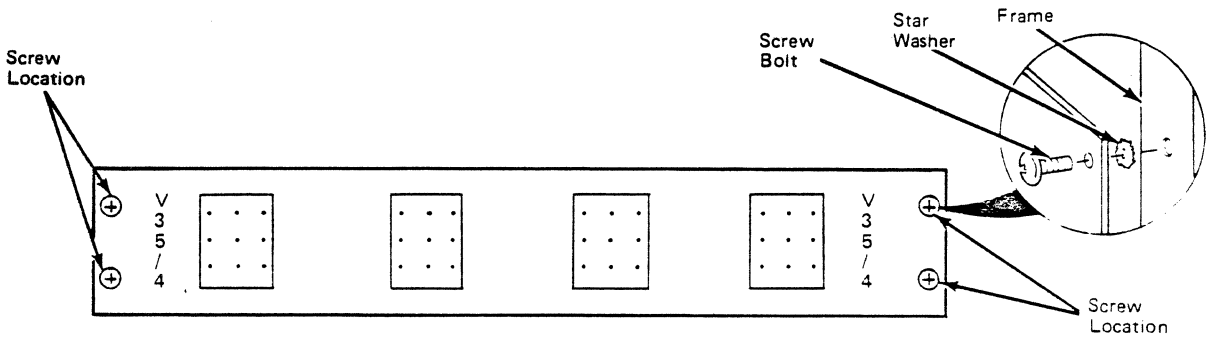

Figure 9-13. Screw Locations for V.35 I/O Panels

The DCE V.35 I/O panel features a jumper array for each port which allows the user to select signal crossovers. The jumper array is located on the inside of the I/O panel, adjacent to each I/O port (Figure 9-14). To jumper a V.35 DCE I/O panel, perform the following procedure.

1. If you are connecting a DTE device to a DCE device, connect pins 3 and 4, default (Figure 9-14).

2. If you are connecting two DCE ports (modem eliminator), connect pins 1 and 2. RTS will be returned on CTS, and signal DCD will be asserted at the other DTE device.

   Note: DSUs may operate (DCE to DTE) with this jumper setting in place. Refer to *IBM 3728 Communication Control Matrix Switch Maintenance Information Manual-1*, SY27-0273 for more details.

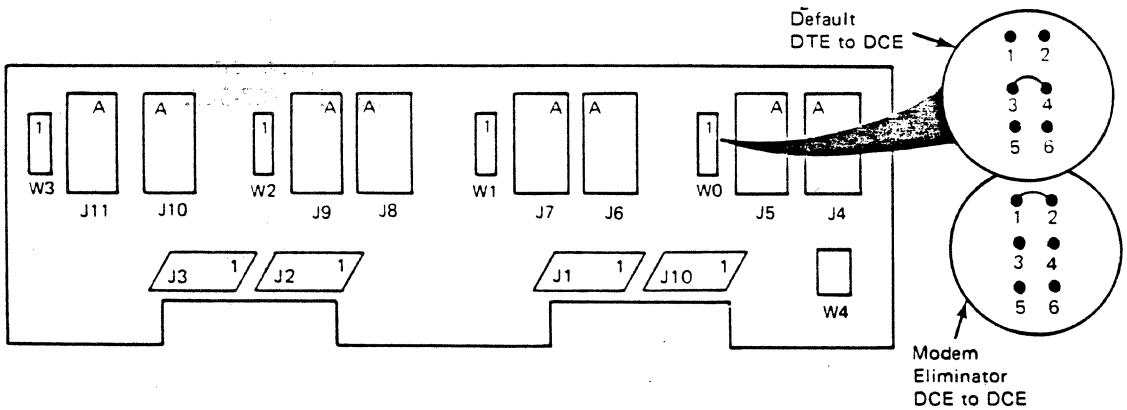

Figure 9-14. V.35 DCE I/O Panel, Pin Side

Section 10.0 - Tape Loading and Matrix Switch Initialization

10.1 Power On

1. Turn on the switch control console (or support processor) and the switch logging printer.

2. Verify that the switch control console port on the Matrix Switch and the switch control console are set to the same bit rate.

3. Verify that all cards are turned on.

4. Insert the switch software minicassette into the minicassette drive and close the minicassette drive door. The exposed portion of the tape points downward, and the minicassette label faces you.

5. Verify that both power supply modules in each unit are turned on.

6. Turn on the Main Power switch in each unit.

   Note: You must power up the switch in sequence starting with the base unit followed by extension unit 1, extension unit 2.... If the units are not powered up in this sequence, false Master Timing Card failures may occur. These failures can be reset by pressing the reset buttons on the Master Timing Cards.

7. The microcode loads from the minicassette indicated by the LED on the minicassette panel.

8. After several minutes, the main panel appears on the screen of the switch control console or the support processor.

9. If there are any error messages, refer to *IBM 3728 Communication Control Matrix Switch Maintenance Information Manual-2*, SY27-0282.

Section 11.0 - Clean Up

1. Replace any internal machine covers previously removed.

2. In case the extension unit is disconnected at a later time, keep all the parts removed in earlier steps with the Matrix Switch for reuse. All parts removed belong to the customer and are their responsibility.

3. Replace all the external machine covers previously removed. (See the location markings on the covers.) Refer to Figures 1-1 and 1-2.

4. Verify that all ground wires are properly reattached to the doors.

5. All packing material belongs to the customer. It is the customer's responsibility to store it.

6. Clean up the installation area.

Section 12.0 - Record Updating

1. Verify the I/O Port designation sheets and configuration forms.
2. World Trade only: Complete the technical activity report (TAR).
3. **EMEA** countries only: Complete the installation report specifically provided for the Matrix Switch.

Section 13.0 - Relocation or Removal of the Matrix Switch

13.1 Mainline Power Disconnection

1. Power off the Matrix Switch (MAIN ON/OFF PWR).
2. Power off the switch control console or the support processor and the switch logging printer.
3. Power off the customer branch circuit (CB/C) for the machines being relocated or removed.
4. Disconnect the Matrix Switch's AC power cord from the AC power receptacle.
5. Coil the removed power cord(s).

13.2 Cable Disconnections

Note: If the machines are being relocated, ensure that all the cables are labeled with their correct locations. It is also advisable to disconnect the cables starting at the top of the I/O connector area(s) and working downwards.

1. Disconnect the SCC or the Support Processor and the SLP cables.
2. Disconnect the NCI cables.
3. Disconnect the digital and analog cables.
4. Remove the bolts that hold the units together (see Figure 7-13).
5. Disconnect the Extension Unit Control Cable.

   Warning: Ensure that the machine casters do not drop into the floor tile openings.

6. Remove the caster locks (PN 184886). Put them in an envelope and write what they are on the face of the envelope.
7. Move the units apart sufficiently to allow access to interframe cables.

8. Disconnect the timing cables.

9. Disconnect the MS/8 cable.

10. Coil the removed cables.

11. **Place the coiled cables into the I/O connector areas.**

13.3 Preparing the Matrix Switch for Relocation

1. Ensure that the removed side cover is installed on the base unit.

2. Pack all parts removed together with all reference manuals, minicassettes, and diskettes.

3. Pack the units using the Pack/Unpack Instructions. Install any internal packaging received in the bill(s) of material.

4. Complete the removal records according to existing procedures, and inform the IBM branch office that the machines are ready for shipment.

13.4 Preparing the PC/XT for Relocation

Follow the procedures outlined in the Relocate Section of the "IBM Personal Computer Hardware Reference Library Guide to Operators," 1502232.

Warning: Permanent loss of data on fixed disk drives may occur if this procedure is not followed.

Abbreviations Glossary

A list of abbreviations and a glossary follow.

Contents

List of Abbreviations

A/PTS	active/passive test switch
ASCII	American Standard Code for Information Exchange
B/M	bill of materials
bps	bits per second
CB/C	customer branch circuit
CCITT	Comite Consultatif International Telegraphe et Telephone (The International Telegraph and Telephone Consultative Committee)
CD	Carrier Detect (signal)
CE	customer engineer
CEM	customer engineering memorandum
CMEM	configuration memory
CRT	cathode ray tube
CTS	Clear To Send (signal)
D	a "D" shape connector
dB	decibel
DCE	data circuit-terminating equipment
DRS	Data Rate Select (signal)
DSR	Data Set Ready (signal)
DSU	digital service unit
DTE	data terminal equipment
DTR	data terminal ready (signal)
EIA	Electronic Industies Association
EMEA	Europe, Middle East, and Africa
EPO	emergency power off
ESD	electrostatic discharge
EUC	extension unit control
Hz	Hertz
IAD	installation activity document
IML	initial microcode loading
I/O	input/output
kbps	kilobits per second (1000 bits per second)
LED	light-emitting diode
LLB	Local Loopback (signal)
LSD	least significant digit
MES	miscellaneous equipment specifications
MHz	megahertz
MIM	maintenance information manual
MOSS	maintenance and operator subsystem
MSD	most significant digit
MS/8	multiunit switch/8
NCI	network control interface
NS	New Sync (signal)
RI	Ring Indicate (signal)
RTT	real-time test
RTM	real-time monitor
SCC	switch control console
SLP	switch logging printer
TAR	technical activity report
VF	voice frequency
V.35	CCITT V.35 recommendation
V.24	CCITT V.24 recommendation

Glossary

active/passive test switch card: The card that allows active and passive monitoring of ports that connect digital and analog signals.

active testing: The process whereby test equipment capable of generating test signals, is connected to a port on the Matrix Switch either directly, or by the active/passive test switch card, or by the V.35 real-time test card.

alphanumeric: Pertaining to a character set that contains letters, digits, and other characters such as punctuation marks.

American Standard Code for Information Interchange (ASCII): A standard code using a coded character set consisting of 7 information bits and 1 parity bit for error-checking purposes.

ASCII: See *American Standard Code for Information Interchange.*

analog: Pertaining to a circuit that operates with continuously variable quantities that can be measured (such as voltages and resistances).

base unit: The unit number 0 of a multi-unit Matrix Switch. This is the only unit that connects to other nodes, and it coordinates the execution of commands in all units of the multi-unit Matrix Switch.

baud: A unit of signaling speed equal to the number of discrete conditions or signal events per second.

bit: A binary digit.

card type: The mnemonic information that identifies a particular card in the Matrix Switch.

CCITT: Comite Consultatif International Telegraphe et Telephone (The International Telegraph and Telephone Consultative Committee).

communication controller: A type of communication control unit whose operations are controlled by one or more programs stored and executed in the unit.

configuration: A predefined set of specifications representing group/port names and their connections.

configuration memory (CMEM): The battery-backed memory located on the microprocessor cards which stores group names, port names, group/port connection records and monitoring commands. Also stores destination address registers for port cards.

customer engineer (CE): An individual who provides field services for IBM products.

data circuit-terminating equipment (DCE): The equipment installed at the user's premises that provides all the functions required to establish, maintain, and terminate a connection, and the signal conversion and coding between the data terminal equipment (DTE) and the line.

Note: The DCE may be separate equipment or an integral part of other equipment.

data terminal: A device, usually equipped with a keyboard and a display device, capable of sending and receiving information over a link.

data terminal equipment (DTE): That part of a device that serves as a data source, data sink, or both, and provides for the data communication control function, according to protocols. Typically a communication controller.

DCE interface: See *DCE/DTE connections.*

DCE/DTE connections: A data circuit-terminating equipment (DCE) connection means the Matrix Switch is presenting a DCE interface and connecting to data terminal equipment (DTE). A DTE connection means the Matrix Switch is presenting a DTE interface and connecting to DCE.

DTE interface: See *DCE/DTE connections.*

EIA: See *Electronic Industries Association.*

EIA/8 port card: The card that services up to eight ports and switches 16 digital signals at each port.

Electronic Industries Association (EIA): A trade association of the electronics industry which formulates technical standards, disseminates marketing data, and maintains contact with government agencies in matters relating to the electronics industry.

EMEA: Europe, Middle East, and Africa

emulation: The imitation of all or part of one computer system by another, primarily by hardware, so that the imitating computer system accepts the same data, executes the same programs, and achieves the same results as the imitated computer system. See *3727 Operators Console emulation.*

error message: The message printed on the switch logging printer stating the cause and location of a fault condition.

event report: The system message indicating an occurrence in the system such as cutover to a redundant subsystem, advisory message, or operator command.

extension unit: Any unit in a multi-unit Matrix Switch other than the base unit.

extension unit control card: The option card serving the supervisory links between extension units. The extension unit control card passes switch control and reporting information between extension units.

group: A collection of from 1 to 120 ports.

IBM 3161 ASCII Display Station: See *switch control console.*

IBM 3728 Communication Control Matrix Switch: See *Matrix Switch.*

IBM 4201 Proprinter: See *switch logging printer.*

IBM 5182 Personal Computer Color Printer, Model 1: See *support processor printer.*

initial microcode loading (IML): The initialization procedure that causes the Matrix Switch microcode to be loaded, so that the computer program can then proceed under its own control.

input/output (I/O): Pertaining to either input or output, or both.

inter-unit connection: The process of connecting a port in one unit (base or extension) to a port in another unit, where both are local attached units.

I/O panel: A series of connectors mounted on sheet metal. I/O panels are affixed to the rear of each Matrix Switch.

main panel: One of two panels directly beneath the mode panel in the hierarchy. The system panel and the panel displayed when Matrix Switch mode is selected from the mode panel are main panels. A main panel is important because the RETURN PF key causes the main panel for the present subtree to be displayed. It is the starting point for entering a command with full prompting.

master timing card: The subsystem that provides clocking to the multiplexer bus.

Matrix Switch: A device capable of electronically switching signals among a number of ports. A Matrix Switch contains 1 to 16 units.

Matrix Switch network: A collection of Matrix Switches connected by communication links that are used to perform central control of the switches.

microcode: A program that is loaded in a processor to replace a hardware function.

microprocessor card: The subsystem that stores the operating system and configuration memory.

minicassette drive: The tape drive used to read the Matrix Switch microcode to the microprocessor cards.

modem: A functional unit that modulates and demodulates signals. One of the functions of a modem is to enable digital data to be transmitted over analog transmission facilities.

monitoring: The process of observing data links for traffic, errors, and condition of interface levels.

multi-unit: Pertaining to a Matrix Switch node that contains 2 to 16 units.

multiunit switch/8 card: The option card that allows cross-unit connections and monitoring.

network: A group of Matrix Switches, in the same or different locations, connected together by a communication link.

network control interface card: The option card serving four redundant communication channels which exchange switch control and reporting information between geographically distributed sites.

node: A Matrix Switch or support processor in a network, addressable by a single node name or number. A Matrix Switch node may contain multiple units.

node name: An alphanumeric name of 3 to 6 characters, beginning with an alphabetic character, used to identify a particular Matrix Switch or support processor.

node number: A hexadecimal number from 0 to 3F (excluding 3E), which uniquely identifies a particular Matrix Switch or support processor.

option cards: The cards that reside in the option slots located to the left of the microprocessor cards. They include the network control interface card, extension unit control card, and active/passive test switch card.

option slots: The card slots reserved for the option cards. Located to the left of the microprocessor card slots.

port: A physical connector on the Matrix Switch.

port card: A printed circuit board supporting multiple ports. Port cards feature drivers and receivers for the communication interface, as well as destination address registers for each port.

port slot: The location of the printed circuit backplane where port cards are inserted. Port slots accept port cards, real-time monitor card, V.35 real-time test card, and multiunit switch/8 card.

power supply modules: The assemblies that provide +5, +12, and −12 volt potentials to the Matrix Switch.

redundancy: A Matrix Switch feature providing automatic backup to the power supply modules, master timing card, and microprocessor card if a failure occurs.

remote node: The distant Matrix Switch site served by a network control interface link.

remote-test port: A dial-up diagnostic port located on the microprocessor connector panel. Allows the IBM Customer Engineer to connect the Matrix Switch to the remote diagnostic center for aid in diagnosing problems.

screen: A physical CRT display device. It is different from the information displayed on it, which is called a panel.

support processor: An intelligent controller (Personal Computer XT) that provides enhanced capabilities to manage a network of Matrix Switches.

support processor printer: An IBM 5182 Personal Computer Color Printer used only with a support processor to provide printed copy of support processor operations and event reports.

switch: A cabinet or cabinet's circuit cards and power supply modules physically connected together in one location. Consoles and printers connect to the switch, and control and monitor switch operation.

switch control console: An asynchronous IBM 3161 ASCII Display Station used to control the Matrix Switch.

switch logging printer: An IBM 4201 Proprinter (with a serial adapter card) serving as a logging device. Prints hard copies that chronicle all switch activity.

switching network: A network that includes the local system and the switching systems that are directly or indirectly connected to it.

system cards: The master timing card and the microprocessor card.

system slots: The location on the printed circuit backplane where the option cards, microprocessor cards, and master timing cards are inserted.

telecommunication: Communication by telegraph or telephone.

telecommunication line: A data circuit used to transfer data.

telecommunication network: A collection of telecommunication equipment (such as modems and communication controllers) connected to a Matrix Switch network.

3725 Communication Controller: An example of telecommunication network equipment that connects to the Matrix Switch. Unless otherwise stated, reference to the 3725 implies that it, or an equivalent device, is applicable for connection to the Matrix Switch.

3727 Operators Console emulation: This occurs when a support processor is set up to emulate the 3727 Operators Console and thereby controls a local 3725 Communication Controller.

unit: One part of a Matrix Switch, contained in a single physical rack. A single unit is the smallest entity capable of providing switching functions.

unit number: A hexadecimal number between 0 and F which identifies one unit of a multi-unit configuration.

VF/16 port card: The card that services up to 16 ports and switches four analog signals at each port.

V.35 real-time test card: The card that allows active and passive testing of two ports that connect to digital signals.

V.35/2 port card: The card that services up to two ports and switches up to 12 of the 14 digital signals at each port.

V.35/4 port card: The card that services up to four ports and switches up to 12 of the 14 digital signals at each port.

SY27-0274-0

IBM 3728 Communication Control Matrix Switch Installation Instructions, Printed in U.S.A. SY27-0274-0

Please Do Not Staple

Fold and Tape Fold and Tape

NO POSTAGE NECESSARY IF MAILED IN THE UNITED STATES

BUSINESS REPLY MAIL

FIRST CLASS PERMIT NO. 40 ARMONK, N.Y.

POSTAGE WILL BE PAID BY ADDRESSEE

International Business Machines Corporation
Dept. E06
P.O. Box 12195
Research Triangle Park
North Carolina 27709

Fold and Tape Fold and Tape

IBM

International Business Machines Corporation
Data Processing Division
1133 Westchester Avenue, White Plains, N.Y. 10604

IBM World Trade Americas/Far East Corporation
Town of Mount Pleasant, Route 9, North Tarrytown, N.Y., U.S.A. 10591

IBM World Trade Europe/Middle East/Africa Corporation
360 Hamilton Avenue, White Plains, N.Y., U.S.A. 10601

IBM 3728 Communication Control Matrix Switch Installation Instructions

SY27-0274-0

READER'S COMMENT FORM

This manual is part of a library that serves as a reference source for systems analysts, programmers, and operators of IBM systems. You may use this form to communicate your comments about this publication, its organization, or subject matter, with the understanding that IBM may use or distribute whatever information you supply in any way it believes appropriate without incurring any obligation to you.

Note: Copies of IBM publications are not stocked at the location to which this form is addressed. Please direct any requests for copies of publications, or for assistance in using your IBM system, to your IBM representative or to the IBM branch office serving your locality.

Possible Topics for comment are:

Clarity Accuracy Completeness Organization Coding Retrieval Legibility

If you wish a reply, give your name, company, mailing address, and date:

_____

_____

_____

_____

What is your occupation? _____

Number of latest Newsletter associated with this publication: _____

Thank you for your cooperation. No postage stamp necessary if mailed in the U.S.A. (Elsewhere, an IBM office or representative will be happy to forward your comments or you may mail directly to the address in the Edition Notice on the back of the title page.)